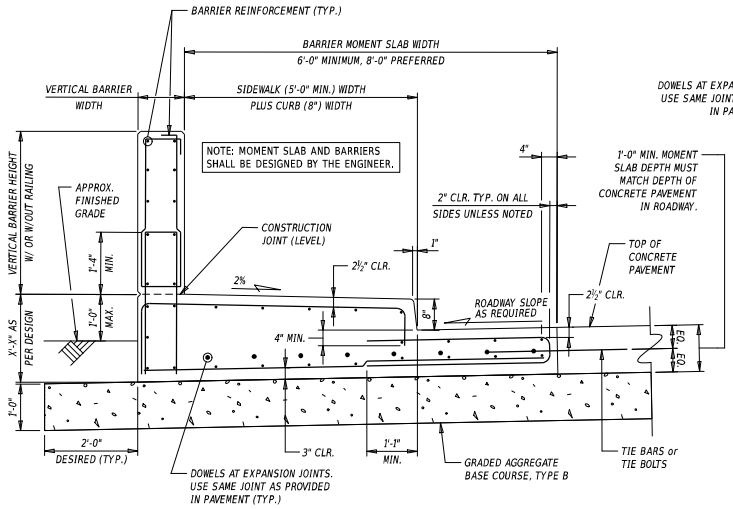

MOMENT SLAB WITH ALTERNATE SIDEWALK AND VERTICAL C.I.P. WALL BARRIER (P.C.C. PAVEMENT)

NOTE: MOMENT SLAB AND BARRIERS SHALL BE DESIGNED BY THE ENGINEER.

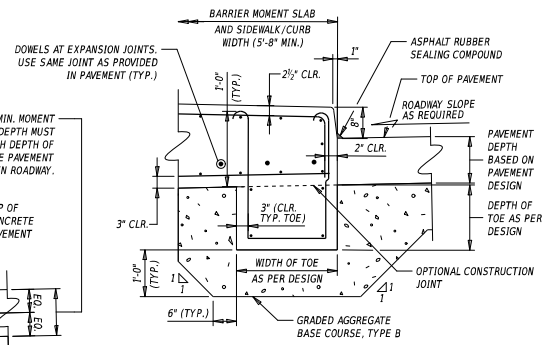

NOTE: MOMENT SLAB AND BARRIERS SHALL BE DESIGNED BY THE ENGINEER.

MOMENT SLAB WITH ALTERNATE SIDEWALK AND VERTICAL C.I.P. WALL BARRIER (HALF-SECTION FOR BITUMINOUS CONCRETE)

NOTE: THE DESIGNER MAY CONSIDER INCREASING THE DEPTH OF THE MOMENT SLAB IN LIEU OF USING TOE.

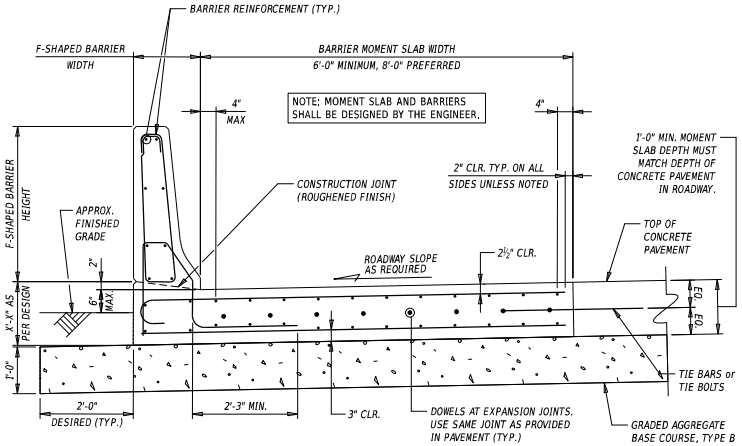

MOMENT SLAB WITH P.C.C. PAVEMENT (AT-GRADE) WITH TYPICAL C.I.P. BARRIER

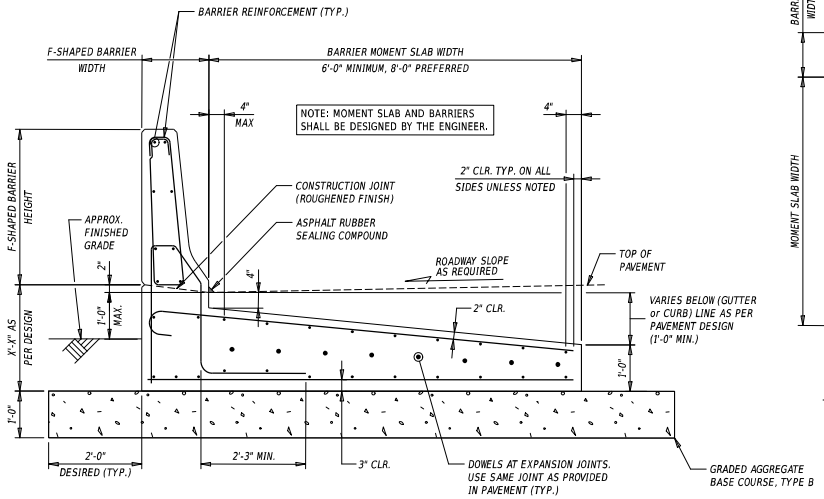

MOMENT SLAB WITH BITUMINOUS CONCRETE (BURIED) WITH TYPICAL C.I.P. BARRIER

NOTE: FOR ALL TYPES OF PAVEMENT, THE HEEL OF MOMENT SLAB SHOULD NOT EXTEND PAST THE SHOULDER STRIPING INTO THE TRAVELED WAY.

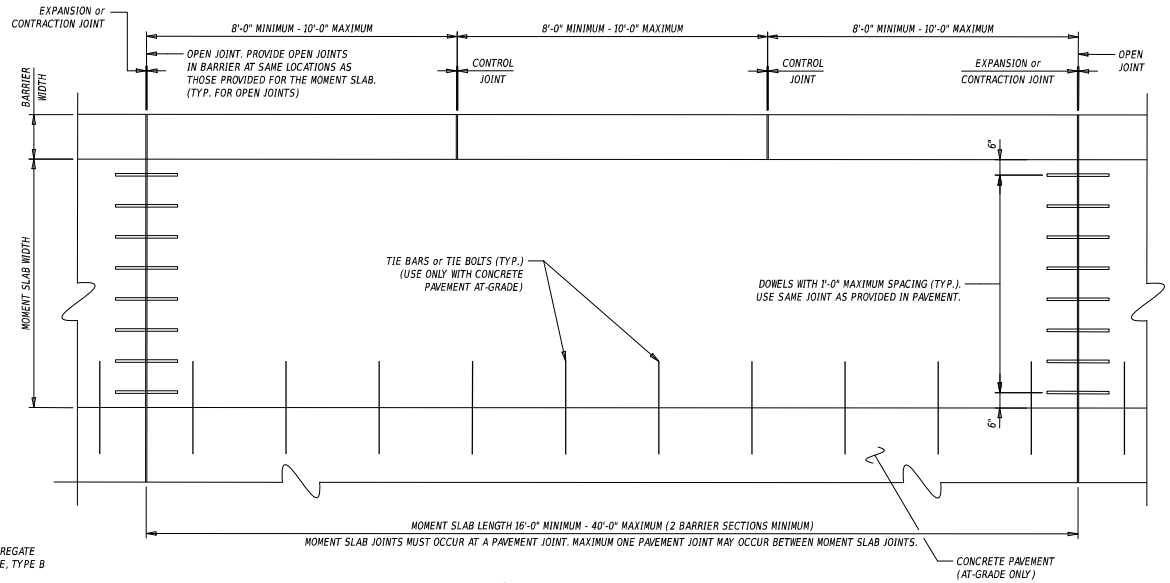

MOMENT SLAB WITH TYPICAL C.I.P. BARRIER PLAN

NOTE: MOMENT SLAB REINFORCEMENT NOT SHOWN FOR CLARITY, BUT MUST BE SHOWN ON THE PLANS. LONGITUDINAL BARRIER REINFORCEMENT MUST BE CONTINUOUS THROUGH BARRIER SECTIONS THROUGHOUT THE ENTIRE MOMENT SLAB LENGTH.

DELAWARE DEPARTMENT OF TRANSPORTATION BRIDGE DESIGN MANUAL	MOMENT SLAB DETAILS	NOT TO SCALE	ISSUE DATE 10/01/2015 04/01/2021 10/01/2017 01/31/2019	DETAIL No. 325.04 SHEET No. 1 of 1