SECTION 200

1. *REMOVAL OF UNSUITABLE MATERIAL:*
SOIL BORINGS HAVE IDENTIFIED MATERIAL, DESCRIBED AS (insert description), THAT (IS or MAY BE) UNSUITABLE FOR BEARING OF THE STRUCTURE AT ELEVATION (x) TO (x). (if necessary), EXCAVATE THIS LAYER (TO A MAXIMUM DEPTH OF (x') BELOW THE BOTTOM OF FOOTING ELEVATION) UNTIL SUITABLE BEARING MATERIAL IS REACHED, AS DIRECTED BY THE ENGINEER. EXCAVATION TO ELEVATION (x) IS INCLUDED IN THE QUANTITY FOR STRUCTURAL EXCAVATION. BACKFILL EXCAVATION BELOW THE FOOTING ELEVATION WITH (specify borrow type, stone and/or crushed concrete or a combination) ON GEOTEXTILE. PAYMENT UNDER (respective items).

2. *ROCK PROFILE VARIATION:* (see designer note 5)
IT IS ANTICIPATED THAT THE ACTUAL PROFILE OF THE ROCK VARIES FROM WHAT HAS BEEN MEASURED, THE ESTIMATED QUANTITIES FOR THE ITEMS LISTED BELOW HAVE BEEN INCREASED xx% OVER THE QUANTITIES CALCULATED:
- (insert item numbers and descriptions)

3. *BLAST MONITORING:* (see designer note 6)
MONITOR BOTH THE EXISTING STRUCTURE AND THE PROPOSED STRUCTURE DURING ANY BLASTING TO ENSURE STRUCTURAL STABILITY THROUGHOUT THE DURATION OF THE PROJECT. THE MAXIMUM PERMISSIBLE LEVEL FOR PEAK PARTICLE VELOCITY (PPV) IS (insert appropriate value) IN/SEC. PAYMENT UNDER ITEM #(207010 or 207011) - ROCK EXCAVATION FOR STRUCTURES.

4. *EMBANKMENTS:*
ALLOW BRIDGE EMBANKMENTS TO SIT UNDISTURBED FOR A MINIMUM (insert number of days)-DAY PERIOD AFTER PLACED TO THE BOTTOM OF ABUTMENT FOOTER ELEVATION, OR AS DIRECTED BY THE ENGINEER. WHEN SETTLEMENT DOES NOT EXCEED (insert value in inches) PER WEEK, RESUME WORK ON THE EMBANKMENT, OR AS DIRECTED BY THE ENGINEER.

5. *REMOVAL OF STRUCTURES AND OBSTRUCTIONS:*
REMOVE THE FOLLOWING ITEMS UNDER ITEM #211000 - REMOVAL OF STRUCTURES AND OBSTRUCTIONS ASSOCIATED WITH BRIDGE (insert bridge number):
- (insert list of items to be removed under #211000)

6. *HAZARDOUS MATERIAL* (existing or previous timber only - see designer note 7)*:*
BE ADVISED THAT THE (existing or previous) STRUCTURE OVER (insert road or stream name) MAY CONTAIN CREOSOTED TIMBER. HANDLE ALL HAZARDOUS MATERIALS (i.e. creosote timber) IN ACCORDANCE WITH SPECIAL PROVISION 202560. PAYMENT INCIDENTAL TO ITEM #211000 - REMOVAL OF STRUCTURES AND OBSTRUCTIONS.

7. *HAZARDOUS MATERIAL* (steel only)*:*
BE ADVISED THAT THE EXISTING STRUCTURE OVER (insert road or stream name) DOES CONTAIN LEAD BASED PAINT. AS A RESULT, DETAIL METHODS OF CUTTING THE BEAMS AND/OR DIAPHRAGMS, IF REQUIRED, IN THE CONTRACTOR'S PROPOSED DEMOLITION PLAN AND HOW THOSE PERSONS PERFORMING SUCH WORK WILL BE PROTECTED IN ACCORDANCE WITH APPLICABLE OSHA REGULATIONS. ADDITIONALLY, DETAIL WHEN AND HOW THE LEAD BASED PAINT WILL BE REMOVED FROM THE STRUCTURAL STEEL AND ALL RELATED BRIDGE COMPONENTS. IF THE WORK IS PERFORMED ON SITE, THEN INCLUDE PROPER PROTECTION, CONTAINMENT, AND FINAL LEAD PAINT DISPOSAL IN THE PROPOSED PLAN. IF THE BEAMS WILL BE TRANSPORTED WITH THE PAINT STILL INTACT, THEN DETAIL HOW THE STRUCTURAL COMPONENTS WILL BE PROTECTED DURING TRANSPORT, WHERE AND HOW THE PAINT WILL BE REMOVED, AND THE LOCATION OF FINAL PAINT DISPOSAL, AGAIN IN ACCORDANCE WITH OSHA REGULATIONS. PROVIDE WRITTEN DOCUMENTATION TO THE ENGINEER, PRIOR TO FINAL CONTRACT ACCEPTANCE, NOTING WHEN AND WHERE THE LEAD BASED PAINT WAS REMOVED, AND THE LOCATION OF FINAL PAINT DISPOSAL. ALL COSTS INVOLVED WITH THE ABOVE LISTED WORK IS INCIDENTAL TO ITEM #211000 - REMOVAL OF STRUCTURES AND OBSTRUCTIONS.

8. *SIGNING:*
TO AVOID DAMAGE, SIGNS WITHIN PROJECT LIMITS MAY BE REMOVED DURING CONSTRUCTION IF NEEDED, BUT MUST BE REPLACED TO MATCH EXISTING CONDITIONS BEFORE REOPENING THE ROADWAY. INCLUDE PAYMENT FOR ALL WORK RELATED TO MOVING AND REINSTALLING THE SIGN IN ITEM #211000 - REMOVAL OF STRUCTURES AND OBSTRUCTIONS. IF THE SIGN IS DAMAGED DURING CONSTRUCTION, REPLACE THE SIGN AT THE CONTRACTOR'S EXPENSE.

SECTION 600

9. *PORTLAND CEMENT CONCRETE:*
USE PORTLAND CEMENT CONCRETE FOR CAST-IN-PLACE ELEMENTS AS FOLLOWS:
(f'c = 28-DAY COMPRESSIVE STRENGTH)
CLASS A - (insert list of structural components utilizing Class A concrete), (f'c = 4.5 ksi)
CLASS B - (insert list of structural components utilizing Class B concrete), (f'c = 3.0 ksi)
CLASS C - (insert list of structural components utilizing Class C concrete), (f'c = 2.0 ksi)
CLASS D - (insert list of structural components utilizing Class D concrete), (f'c = 4.5 ksi)

(cast-in-place concrete only) SUPPLY THE CONCRETE FOR THE BRIDGE DECK, APPROACH SLAB, AND PARAPETS THAT INCLUDES A SHRINKAGE-REDUCING/COMPENSATING ADMIXTURE. THE ADMIXTURE MAY BE SUPPLIED BY ONE PRODUCT THAT PROVIDES BOTH EXPANSION AND PORE WATER SURFACE TENSION OR TWO SEPARATE PRODUCTS EACH ADDED AT DOSAGE RECOMMENDED BY MANUFACTURER'S TECHNICAL DATA SHEETS AND HAVING THE FOLLOWING CHARACTERISTICS:
(a.) DESIGNED TO PROVIDE BOTH OF THE FOLLOWING CHARACTERISTICS:
(i.) EXPANDS AT A RATE THAT CLOSELY COMPENSATES FOR THE SHRINKAGE OF THE CONCRETE MIX.
(ii.) REDUCES THE CAPILLARY SURFACE TENSION OF THE CONCRETE PORE WATER.
(b.) PROVIDES AT LEAST 80% SHRINKAGE REDUCTION AS MEASURED AND DOCUMENTED BY FIELD PERFORMANCE.
(c.) FORMULATED FOR USE IN FREEZING AND THAWING WEATHER.
USE ADMIXTURES THAT ARE COMPATIBLE WITH ALL OTHER CONCRETE-MIX DESIGN CONSTITUENTS. CALCIUM CHLORIDE IS NOT PERMITTED; NO CHEMICAL ADMIXTURES WHICH CONTAIN MORE THAN 0.1% CHLORIDE BY WEIGHT, WILL BE PERMITTED FOR USE. DOSAGE RATE AND MIXING SEQUENCE WILL BE IN ACCORDANCE WITH THE MANUFACTURER'S RECOMMENDATIONS.

(see designer note 8) *SLIP-FORMING OF PARAPETS IS (NOT ALLOWED or ALLOWED).* (if allowed, add reference to special provisions from the designer note.)

SECTION 600 (CONTINUED)

9. *PORTLAND CEMENT CONCRETE (CONTINUED):*
USE PORTLAND CEMENT CONCRETE FOR PRECAST ELEMENTS AS FOLLOWS:
(f'c = 28-DAY COMPRESSIVE STRENGTH)
(f'ci = COMPRESSIVE STRENGTH AT INITIAL PRESTRESS)
(insert list of precast structural components):
f'c = (insert f'c value) ksi; f'ci = (insert f'ci value) ksi
-DESIGN ASSUMPTIONS: THE PRESTRESSED CONCRETE BEAMS WERE DESIGNED FOR (MODERATE or SEVERE CORROSIVE CONDITIONS) AS PER A5.9.2.3.2b.
(when using draped strands) *THE HOLD DOWN FORCE DUE TO DRAPED STRANDS IS xx KIPS.* (if the force exceeds 20 kips)

(for use with cast-in-place or precast concrete) *THE (describe elements) ARE DESIGNATED AS MASS CONCRETE POURS. A TEMPERATURE CONTROL PLAN IS REQUIRED FOR THESE ELEMENTS. REFER TO SECTIONS 610.3.1.A.2 AND 610.3.4.D.3 OF THE STANDARD SPECIFICATIONS FOR MORE INFORMATION.*

(if using lightweight concrete) *USE LIGHTWEIGHT CONCRETE WITH A UNIT WEIGHT OF xxx PCF.* (describe any additional material properties as necessary)

10. *DECK SLAB:*
THE DECK SLAB THICKNESS INCLUDES ½" INTEGRAL WEARING SURFACE.

11. *PARAPET FORM LINERS*
PROVIDE A (BRICK or STONE or AESTHETIC) PARAPET FORM LINER PATTERN. (PAINT or STAIN) THE FORM-LINED SURFACE. THE COLOR(s) WILL BE (insert color) CONFORMING TO (FEDERAL COLOR #xxxxx or other standard).
-if using multiple colors describe which is used where
-if requiring a sample panel (see Section 604.3.3.C of Standard Specifications) *include - PRIOR TO CONSTRUCTING PARAPETS, CONSTRUCT A x' BY x' SAMPLE PANEL FOR APPROVAL.*

12. *BAR REINFORCEMENT:*
-PROVIDE REINFORCING STEEL CONFORMING TO AASHTO M31 (ASTM A615), GRADE 60.
-PROVIDE A 3" CLEAR COVER FOR ALL REINFORCING STEEL PLACED IN CONCRETE CAST AGAINST EARTH OR A 2" CLEAR COVER ELSEWHERE, UNLESS OTHERWISE SPECIFIED ON THE PLANS.
-WHERE A SUFFIX IS INCLUDED IN BAR MARKS, PROTECT ALL REINFORCING STEEL WITH THE MATERIAL DENOTED.
SUFFIX 'E' DENOTES EPOXY COATED BAR REINFORCEMENT
SUFFIX 'G' DENOTES GALVANIZED BAR REINFORCEMENT
SUFFIX 'S' DENOTES STAINLESS STEEL BAR REINFORCEMENT

-WITH APPROVAL OF THE BRIDGE DESIGN ENGINEER, GALVANIZED REINFORCING STEEL MAY BE SUBSTITUTED FOR EPOXY-COATED REINFORCING STEEL AT NO ADDITIONAL COST TO THE DEPARTMENT.

13. *PRECAST BEAMS AND PIER DIAPHRAGMS* (typical for multi-span precast prestressed concrete beams)*:*
DO NOT POUR PIER DIAPHRAGMS WITHIN 90 DAYS AFTER THE CASTING OF THE BEAMS. IF THIS TIME FRAME IS NOT SUFFICIENT, SUBMIT FOR APPROVAL A DESIGN SHOWING STRUCTURAL CALCULATIONS TO ACCOUNT FOR RESTRAINT MOMENTS.

14. *INTERMEDIATE DIAPHRAGMS* (typical for precast prestressed concrete beams)*:*
THE PRECASTER AND/OR THE CONTRACTOR MAY USE A PRECAST CONCRETE OR GALVANIZED STEEL ALTERNATE FOR THE INTERMEDIATE DIAPHRAGMS. IF THIS OPTION IS CHOSEN, INCLUDE NEW CONNECTION DETAILS IN THE PRECAST PRESTRESSED BEAM WORKING DRAWINGS FOR APPROVAL.

15. *END AND PIER DIAPHRAGMS* (typical for precast prestressed concrete beams)*:*
END DIAPHRAGMS AND PIER DIAPHRAGMS FOR (insert pier numbers) CANNOT BE POURED UNTIL DECK POUR (insert deck pour sequence number) IS COMPLETED.

16. *CONCRETE SEALER:*
REFER TO DIAGRAMS CONTAINING CONCRETE SEALER LIMITS ON SHEET(s) (insert sheet number(s)). PAYMENT UNDER (insert appropriate item number). (if necessary, insert appropriate notes describing limits of protective coating if such details are difficult to outline on the plans.)

17. *ABUTMENT PROTECTION:*
APPLY (insert relevant protection information) FOR ABUTMENT PROTECTION. APPLY PROTECTION (insert dimension) FROM THE FACE OF EACH ABUTMENT or MSE WALL AND TERMINATE IN A 2'-0" DEEP TOE.

18. *STRUCTURAL STEEL:* (see designer note 9)
PROVIDE STRUCTURAL STEEL CONFORMING TO AASHTO M270, GRADE 50 or 50W (ASTM A709, GRADE 50 or 50W) DESIGNATION, EXCEPT WHEN NOTED OTHERWISE. THE ADDITIONAL REQUIREMENTS FOR CHARPY V-NOTCH TESTING OF AASHTO M270 ARE MANDATORY FOR PRIMARY LOAD CARRYING MEMBERS. USE TESTING PARAMETERS FOR TEMPERATURE ZONE 2. MEMBERS REQUIRING CHARPY V-NOTCH TESTING (DENOTED AS 'CVN' ON PLANS) INCLUDE:
-TOP AND BOTTOM GIRDER FLANGES
-GIRDER WEB PLATES
-GIRDER FIELD SPLICE PLATES (remove note if not applicable)
-DIAPHRAGM MEMBERS AND DIAPHRAGM CONNECTION PLATES (only if considered a primary member such as in curved or highly skewed bridges)

ALL FASTENERS ARE ⅞" DIAMETER (⅞" is standard diameter. Edit if design requires another diameter.) *ASTM F3125 HIGH STRENGTH BOLTS, TYPE 1 GRADE Axxx* (A325 for medium carbon steel or A490 for alloy steel - corresponding to former stand-alone ASTM specifications) *or TYPE 3* (weathering steel), *UNLESS OTHERWISE NOTED.*

(see designer note 10) *REAM SUBDRILLED or SUBPUNCHED HOLES FOR FIELD SPLICES IN THE FABRICATION SHOP.*

SECTION 600 (CONTINUED)

18. *STRUCTURAL STEEL (CONTINUED):*
(for straight girders only - see designer note 11) *USE OVERSIZED HOLES ON DIAPHRAGM CONNECTORS. ALL BOLTS ON DIAPHRAGMS MUST BE FINGER TIGHT AT ERECTION. BOLTS ARE TO BE TORQUED BEFORE CONCRETE DECK IS POURED.* (insert additional language on bolt tightening sequence for phased constructions).

THE FAYING SURFACE CLASSIFICATION IS (insert class x surface conditions). (see Section 106.8.6, A6.13.2.8 and Section 616.3 of Standard Specifications for more information)

STRUCTURAL MEMBERS LABELED WITH 'FCN' DENOTES FRACTURE CRITICAL MEMBERS. (see Section 106.8.2.1 for more information)

(Note that Section 604.3.2.A.3 of Standard Specifications says not to weld formwork unless specified in the contract. If allowing threaded studs (a possible exception), then include this note) *THREADED STUDS FOR THE SUPPORT OF THE DECK OVERHANG FORMING BRACKET ARE PERMITTED PROVIDED THE THREADED STUD IS ATTACHED WITH THE SAME WELDING PROCESSING AS THE SHEAR STUDS.*

Welding sub-notes (these are items not addressed in the Standard Specifications)
-MAKE TACK WELDS WITH THE SAME TYPE OF ELECTRODE AND INCORPORATE IN THE FINAL WELD. NO OTHER TACK WELDING WILL BE PERMITTED.
-OVERHEAD WELDING IS NOT PERMITTED IN THE FIELD UNLESS OTHERWISE SPECIFIED ON THE PLANS.
-DO NOT MAKE WELDS BY MANUAL SHIELDED METAL ARC PROCESS FOR PRIMARY GIRDER WELDS SUCH AS FLANGE TO WEB WELDS OR FOR SHOP SPLICES OF WEB AND FLANGES.

(typical for curved or skewed girders) *ERECT GIRDER WEBS IN THE (insert appropriate condition) CONDITION.* (as described in Section 106.8.9.1.3)

SET ANCHOR BOLTS TO TEMPLATE OR IN PRE-FORMED HOLES. DO NOT DRILL UNLESS SPECIFICALLY INDICATED ON PLANS. FILL THE PRE-FORMED HOLES WITH NON-SHRINK GROUT. IN MASONRY PLATES, FILL THE CLEARANCE BETWEEN ANCHOR BOLTS AND HOLES WITH APPROVED NON-HARDENING CAULKING COMPOUND.

19. *PERFORATED PIPE UNDERDRAINS:*
MINIMUM INSTALLATION SLOPE SHALL BE 0.02 FT./FT. CAP FREE ENDS.

20. (for precast culverts, rigid frames and retaining walls) *THE FACTORED BEARING RESISTANCE OF SOIL BENEATH PRECAST ELEMENTS IS x.xx ksf.*

SECTION 800

21. *MAINTENANCE OF TRAFFIC:*
(for use with full road closures) *MAINTAIN TRAFFIC AS PER DETOUR PLAN. ALL MOT ITEMS, WITH THE EXCEPTION OF PORTABLE CHANGEABLE MESSAGE SIGNS (ITEM 803001) AND FLAGGERS (insert appropriate item numbers), WILL BE INCLUDED IN ITEM #801500 - MAINTENANCE OF TRAFFIC, ALL INCLUSIVE.*

22. *TEMPORARY MOUNTED BARRIERS:*
SUBMIT FOR APPROVAL A WORKING DRAWING DETAILING THE PROPOSED MEANS AND METHODS TO ANCHOR THE PORTABLE PCC STRUCTURE MOUNTED BARRIER (DESIGNED FOR TL-(insert value) IMPACT LOADING) AND TO REPAIR THE BOLT HOLES IN THE DECK. ADJUST THE LOCATION OF ANCHORS TO AVOID CONFLICT WITH BAR REINFORCEMENT IN THE DECK. PAYMENT INCIDENTAL TO ITEM #(insert item number and description).

SECTION 900

23. *USE OF WELL POINTS:* (see designer note 13)
SOIL BORINGS HAVE IDENTIFIED POTENTIAL ISSUES WITH A HIGH WATER TABLE (and/or) RUNNING SANDS, DESCRIBED AS (insert description) AT ELEVATION (x). IF NEEDED AND WITH APPROVAL OF THE ENGINEER, INSTALL A WELL POINT SYSTEM TO LOWER THE GROUNDWATER ELEVATION. PAYMENT UNDER ITEM #906005 - WELL POINT SYSTEM.

MISCELLANEOUS

24. *DESIGN SPECIFICATIONS:*
(A) DELDOT BRIDGE DESIGN MANUAL, 2023 EDITION
(B) AASHTO LRFD BRIDGE SPECIFICATIONS, 2020, 9TH EDITION, CUSTOMARY U.S. UNITS.

MISCELLANEOUS (CONTINUED)

25. *LOADING:* (see designer note 14)
-DEAD LOADS INCLUDE 25 PSF FOR FUTURE WEARING SURFACE ON DECK SLAB AND 15 PSF FOR STAY-IN-PLACE FORMS (INCLUDES CONCRETE IN FORM CORRUGATIONS). (the designer should also include barrier or fence loads with percentage of load applied to exterior and first interior beam).
-DESIGN LIVE LOADS INCLUDE HL-93 LOADING.
-FATIGUE DESIGN IS BASED ON THE FOLLOWING ONE DIRECTIONAL TRAFFIC VOLUMES: ADTT = (insert value and year).
-LIVE LOAD DISTRIBUTION TO THE GIRDERS IS BASED ON THE AASHTO SIMPLIFIED METHOD or THE GRILLAGE METHOD (when using refined analysis).
-(for steel girders) *LIVE LOAD DISTRIBUTION FACTOR IS x.xx.* (provide a table if necessary for multiple spans or bridges - see Section 106.8.8)
*-THERMAL LOADS AND MOVEMENTS ARE BASED ON THE MODERATE TEMPERATURE RANGE AS STIPULATED IN THE AASHTO LRFD DESIGN SPECIFICATIONS AS (*insert temperature range specified for each material type in A3.12*) . THE NORMAL TEMPERATURE WILL BE CONSIDERED TO BE 68°F.*
-LIVE LOAD DEFLECTION LIMIT IS L/(insert value).
-FOR SEISMIC LOADS, CONSIDER SEISMIC PERFORMANCE ZONE 1, WITH A SITE CLASS = (insert A, B, C, D, E, or F) AND OPERATIONAL CATEGORY = (insert CRITICAL, ESSENTIAL, or OTHER).
-(for standard form support systems only in accordance with requirements specified in Figure 106-1) *THE FASCIA GIRDERS ARE DESIGNED FOR A TEMPORARY CONSTRUCTION LOAD APPLIED TO THE WEB WITHIN 6" OF THE BOTTOM FLANGE AT APPROXIMATELY 4'-0" INTERVALS. THIS LOAD APPROXIMATES THE HORIZONTAL COMPONENT OF A DECK SLAB OVERHANG FORM SUPPORT BRACKET AND CONSISTS OF A (insert value) kip/ft ALLOWANCE FOR THE WEIGHT OF THE CONCRETE, FORMS, AND DECK FINISHING MACHINE.*
-FOR REINFORCEMENT DISTRIBUTION REQUIREMENTS, CONSIDER CLASS 1 or 2 EXPOSURE CRITERIA FOR DECKS.
-BARRIERS HAVE BEEN DESIGNED FOR MASH TEST LEVEL (insert test level value) (TL-X).

26. *EXISTING CONDITIONS* (sample notes for use on rehabilitation projects, use and/or revise to make project specific as appropriate. Also see designer note 15)*:*
-ALL EXISTING DIMENSIONS AND ELEVATIONS SHOWN ARE BASED ON THE BEST AVAILABLE INFORMATION AND ARE APPROXIMATE ONLY. FIELD VERIFY ALL EXISTING DIMENSIONS, GEOMETRY, AND ELEVATIONS AS NECESSARY PRIOR TO ORDERING ANY MATERIALS AND COMMENCING CONSTRUCTION TO ENSURE PROPER FIT OF THE PROPOSED CONSTRUCTION. PAYMENT UNDER ITEM #763501 - CONSTRUCTION ENGINEERING.
-DO NOT CONSIDER ANY OF THE DATA ON THE EXISTING STRUCTURE SUPPLIED IN THE ORIGINAL DESIGN DRAWINGS OR MADE AVAILABLE BY THE DEPARTMENT OR ITS AUTHORIZED AGENTS AS ACCURATE REPRESENTATIONS OF ANY OF THE CONDITIONS THAT WILL BE ENCOUNTERED IN THE FIELD.

27. *CONTINGENT QUANTITIES:* (see designer note 15)
THESE CONTRACT DRAWINGS HAVE BEEN PREPARED BASED ON ORIGINAL CONTRACT PLANS AND FIELD INSPECTION NOTES. ACTUAL CONDITIONS MAY REQUIRE MODIFICATION IN CONSTRUCTION DETAILS AND REQUIRED QUANTITIES. THE ESTIMATED QUANTITIES FOR THE FOLLOWING PAY ITEMS INCLUDE CONTINGENCY FACTORS TO ACCOUNT FOR THE ANTICIPATED VARIATIONS IN THE ACTUAL QUANTITY.
- (insert item numbers, descriptions, and percent of contingency estimated)

28. *HYDRAULIC DATA:*

DRAINAGE AREA:	*xxx sq. miles*	*DESIGN FREQ.: (insert design storm year) YEARS*	
DESIGN DISCHARGE:	*xxxx cfs*	*100-YEAR DISCHARGE:*	*xxxx cfs*
EXISTING (DESIGN STORM) WSE:	*xx.xx ft*	*PROPOSED (DESIGN STORM) WSE:*	*xx.xx ft*
EXISTING (DESIGN STORM) VELOCITY:	*xx.xx fps*	*PROPOSED (DESIGN STORM) VELOCITY:*	*xx.xx fps*
EXISTING 100-YEAR WSE:	*xx.xx ft*	*PROPOSED 100-YEAR WSE:*	*xx.xx ft*
EXISTING 100-YEAR VELOCITY:	*xx.xx fps*	*PROPOSED 100-YEAR VELOCITY:*	*xx.xx fps*
EXISTING WATERWAY OPENING:	*xxx sq. ft*	*PROPOSED WATERWAY OPENING:*	*xxx sq. ft*

note for tidal areas the following additional information is required:
MEAN HIGH WATER ELEVATION: xx ft
MEAN LOW WATER ELEVATION: xx ft
VERTICAL UNDER CLEARANCE: xx ft

29. *SCOUR ANALYSIS:*
SCOUR DESIGN FREQUENCY: xxx YEARS or OVERTOPPING (as per guidance of Section 104.4 - 'scour evaluation and protection' and Figure 104-8)
SCOUR DESIGN FLOOD DISCHARGE: xxx cfs
SCOUR DESIGN FLOOD VELOCITY: xx fps (AT BRIDGE OUTLET)
WATER SURFACE ELEVATION: xx ft (IMMEDIATELY UPSTREAM OF BRIDGE)
CALCULATED SCOUR DEPTH AT EACH SUBSTRUCTURE UNIT: xx ft (list all units)

SCOUR COUNTERMEASURES HAVE BEEN DESIGNED FOR THE SCOUR DESIGN FLOOD IN ACCORDANCE WITH HEC 23 - BRIDGE SCOUR AND STREAM INSTABILITY COUNTERMEASURES and/or HEC 14 - HYDRAULIC DESIGN OF ENERGY DISSIPATORS FOR CULVERTS AND CHANNELS (as appropriate).

30. *ROADWAY CLEARANCES:* (see Section 103.3.5)
MAINTAIN A MINIMUM OF (insert value) ABOVE ALL ROADWAYS.

31. *UTILITIES:* (include note on projects with complex utility issues)
SEE UTILITY STATEMENT AND UTILITY RELOCATION PLAN SHEETS FOR FURTHER INFORMATION ON UTILITY COORDINATION.
(add project specific notes to describe unusual and complex utility issues such as possible construction conflicts, unknown conditions due to limited information, coordination with construction phasing, etc.)

DESIGNER NOTES

1. THE 'BRIDGE PROJECT NOTES' CONTAINS A GROUP OF TYPICAL NOTES USED IN DELDOT PROJECTS, AND IS ORGANIZED INTO DELDOT STANDARD SPECIFICATIONS SECTIONS. THE DESIGNER SHOULD USE ONLY APPLICABLE NOTES, AS SHOWN ON BOTH SHEETS, AND MODIFY THE NOTES AS NECESSARY TO MAKE THEM PROJECT-SPECIFIC. WHERE THERE ARE SUB-NOTES, USE APPLICABLE SUB-NOTES (SUB-NOTE FORMAT MAY BE RETAINED OR SUB-NOTES MAY BE USED AS STAND ALONE NOTES). FURTHERMORE, IT IS THE DESIGNER'S RESPONSIBILITY TO ENSURE ALL APPROPRIATE PROJECT NOTES ARE INCLUDED IN THE PLAN SET, WHICH ALSO INCLUDE ANY PROJECT SPECIFIC NOTES NOT LISTED UNDER DETAIL NO. 301.01.

2. FOR BRIDGES UNDER THEIR OWN CONTRACTS, MICROSTATION CELLS AND .DGN FILES FOR THE PROJECT NOTES SHEET ALONG WITH GENERAL AND TYPICAL PROJECT NOTES CAN BE FOUND IN THE DELDOT DESIGN RESOURCE CENTER. THE GENERAL AND TYPICAL PROJECT NOTES AS FOUND ON THE DESIGN RESOURCE CENTER SHOULD BE USED AS APPROPRIATE ALONG WITH PROJECT-SPECIFIC TYPICAL BRIDGE NOTES.

3. THE 'QUANTITIES' TABLE IS ONLY REQUIRED FOR PROJECTS WHERE BRIDGES ARE PART OF A LARGER PROJECT. QUANTITIES ARE TYPICALLY INCLUDED WITH BRIDGE PROJECT NOTES.

4. THE 'LOAD RATING SUMMARY' TABLE IS REQUIRED TO BE SHOWN ON ALL BRIDGE PROJECT PLAN SETS. LOAD RATING SUMMARY IS TYPICALLY INCLUDED WITH BRIDGE PROJECT NOTES. IN MOST CASES, (SEE SECTION 108.5) INFORMATION FOR THE TABLE IS PROVIDED BY DELDOT'S BRIDGE MANAGEMENT SECTION AFTER THE SEMI-FINAL CONSTRUCTION PLAN SUBMITTAL.

5. UNDER 'BRIDGE PROJECT NOTES' NOTE 2, THIS NOTE IS TYPICALLY NECESSARY FOR PROJECTS WHERE INFORMATION ON ROCK PROFILE VARIATION IS LIMITED, THUS REQUIRING AN ADDITIONAL CONTINGENCY OF AT LEAST 25% FOR THE QUANTITY OF SEVERAL ITEMS.

6. UNDER 'BRIDGE PROJECT NOTES' NOTE 3, REFER TO SECTION 210.5.2.2 FOR MORE INFORMATION ON DETERMINING THE APPROPRIATE PROJECT-SPECIFIC MAXIMUM PERMISSIBLE LEVEL FOR PEAK PARTICLE VELOCITY (PPV).

7. UNDER 'BRIDGE PROJECT NOTES' NOTE 6, MANY EXISTING PIPE, CULVERT AND RIGID FRAME STRUCTURES WERE PRECEEDED BY A TIMBER STRUCTURE. OFTEN TIMBER ELEMENTS REMAIN EITHER BELOW OR OUTSIDE OF THE FOOTPRINT OF THE BRIDGE. INCLUDE THIS NOTE AS A CONTINGENCY.

8. UNDER 'BRIDGE PROJECT NOTES' NOTE 9, SLIP-FORMING OF BARRIERS IS NOT ALLOWED AS PER SECTION 610.3.4.D.4 OF STANDARD SPECIFICATIONS UNLESS IT IS SPECIFICALLY ALLOWED IN THE CONTRACT. IF SLIP-FORMING IS USED, FOLLOW THE SPECIAL PROVISIONS OF ITEM 610510.

9. UNDER 'BRIDGE PROJECT NOTES' NOTE 18, THE DESIGNER SHOULD TAKE CARE TO INCLUDE ONLY RELEVANT AND PROJECT SPECIFIC NOTES FOR STEEL MEMBERS USED IN THE PROJECT. SOME OF THE NOTES APPLY ONLY TO CURVED GIRDERS OR MULTI-SPAN STRUCTURES, AND THESE NOTES SHOULD BE REMOVED IF THE PROJECT ONLY INCLUDES STRAIGHT GIRDERS OR SIMPLE SPAN STRUCTURES.

10. Reserved for future use.

11. Reserved for future use.

12. Reserved for future use.

13. UNDER 'BRIDGE PROJECT NOTES' NOTE 23, REFER TO SECTION 210.4.7D FOR MORE INFORMATION ON RUNNING SANDS.

14. UNDER 'BRIDGE PROJECT NOTES' NOTE 25, THE INFORMATION ON SITE CLASSES CAN BE FOUND IN TABLE A3.10.3.1-1. INFORMATION ON OPERATIONAL CATEGORY CAN BE FOUND IN A3.10.5, A3.10.7 AND SECTION 203.10.5. THE INFORMATION ON CLASS EXPOSURE CRITERIA CAN BE FOUND IN A5.6.7.

15. UNDER 'BRIDGE PROJECT NOTES' NOTE 26 OR 27, THESE NOTES ARE TYPICALLY NECESSARY FOR PROJECTS WHERE INFORMATION ON CERTAIN EXISTING CONDITIONS (REHABILITATION PROJECTS OR GEOTECHNICAL INFORMATION FOR INSTANCE) ARE LIMITED, THUS REQUIRING AN ADDITIONAL CONTINGENCY OF AT LEAST 25% FOR SEVERAL ITEM NUMBERS. IF USING BOTH NOTES 26 AND 27, EDIT TO BE PROJECT SPECIFIC AND AVOID CONFLICTS BETWEEN NOTES.

16. THE DESIGNER SHOULD PLACE THE FOLLOWING STANDARD NOTE ON EACH OF THE EXISTING BRIDGE PLANS WHICH ARE TO BE SUPPLIED TO PROSPECTIVE BIDDERS: 'BIDDERS ARE ADVISED TO FIELD VERIFY INFORMATION PRESENTED. THE DATA SHOWN HEREIN IS NOT PART OF THE PLANS, PROPOSAL, OR CONTRACT, AND IS NOT TO BE CONSIDERED AS A BASIS FOR COMPUTATION FOR ANY PURPOSE'.

EXPLANATORY NOTE

##. HOW TO USE BRIDGE PROJECT NOTES:
(some notes apply only to certain types of projects or construction. such notation is included in this detail as information to the designer. Delete this text when using on a project.)
(see designer note ## text is added when more information on the usage of the particular note can be found in the Designer Notes. Delete when using on a project.)
(any text within notes in the DelDOT Eng Heavy font is included as information to the designer. Delete when using on a project.)
UTILIZE BRIDGE PROJECT NOTES AS APPROPRIATE TO THE PARTICULAR PROJECT.
NOTES THAT CONTAIN (lowercase text within parentheses) REQUIRE DESIGNER INPUT AND EDITING.
SOME NOTES CONTAIN (this OR that) CHOICES AND REQUIRE DESIGNER EDITING TO SPECIFY WHICH OPTION WAS USED ON THE PROJECT.

LOAD RATING SUMMARY

DESIGN VEHICLE	*RATING FACTOR*	*RATING WEIGHT (TON)*	*CONTROLLING MEMBER*	*CONTROLLING POINT*	*LOAD EFFECT*
HL-93 TRUCK+LANE (INVENTORY)	*X.XX*	*XX.XX*	*XXXXXXXXXXXXXXX*	*XXX*	*XXXXXXX*
HL-93 TANDEM+LANE (INVENTORY)	*X.XX*	*XX.XX*	*XXXXXXXXXXXXXXX*	*XXX*	*XXXXXXX*
HS-20 (INVENTORY)	*X.XX*	*XX.XX*	*XXXXXXXXXXXXXXX*	*XXX*	*XXXXXXX*
HL-93 TRUCK+LANE (OPERATING)	*X.XX*	*XX.XX*	*XXXXXXXXXXXXXXX*	*XXX*	*XXXXXXX*
HL-93 TANDEM+LANE (INVENTORY)	*X.XX*	*XX.XX*	*XXXXXXXXXXXXXXX*	*XXX*	*XXXXXXX*
HS-20 (OPERATING)	*X.XX*	*XX.XX*	*XXXXXXXXXXXXXXX*	*XXX*	*XXXXXXX*
DE S220 & LEGAL-LANE (LEGAL)	*X.XX*	*XX.XX*	*XXXXXXXXXXXXXXX*	*XXX*	*XXXXXXX*
DE S335 & LEGAL-LANE (LEGAL)	*X.XX*	*XX.XX*	*XXXXXXXXXXXXXXX*	*XXX*	*XXXXXXX*
DE S437 & LEGAL-LANE (LEGAL)	*X.XX*	*XX.XX*	*XXXXXXXXXXXXXXX*	*XXX*	*XXXXXXX*
DE T330 & LEGAL-LANE (LEGAL)	*X.XX*	*XX.XX*	*XXXXXXXXXXXXXXX*	*XXX*	*XXXXXXX*
DE T435 & LEGAL-LANE (LEGAL)	*X.XX*	*XX.XX*	*XXXXXXXXXXXXXXX*	*XXX*	*XXXXXXX*
DE T540 & LEGAL-LANE (LEGAL)	*X.XX*	*XX.XX*	*XXXXXXXXXXXXXXX*	*XXX*	*XXXXXXX*
EV2 (EMERGENCY VEHICLE)	*X.XX*	*XX.XX*	*XXXXXXXXXXXXXXX*	*XXX*	*XXXXXXX*
EV3 (EMERGENCY VEHICLE)	*X.XX*	*XX.XX*	*XXXXXXXXXXXXXXX*	*XXX*	*XXXXXXX*
SU4 (LEGAL)	*X.XX*	*XX.XX*	*XXXXXXXXXXXXXXX*	*XXX*	*XXXXXXX*
SU5 (LEGAL)	*X.XX*	*XX.XX*	*XXXXXXXXXXXXXXX*	*XXX*	*XXXXXXX*
SU6 (LEGAL)	*X.XX*	*XX.XX*	*XXXXXXXXXXXXXXX*	*XXX*	*XXXXXXX*
SU7 (LEGAL)	*X.XX*	*XX.XX*	*XXXXXXXXXXXXXXX*	*XXX*	*XXXXXXX*
NOTE: LOAD RATING INCLUDES FUTURE WEARING SURFACE AS NOTED IN THE PLANS.					

note: for astm c1577 precast concrete box culverts, include additional information for the load rater such as design earth cover, reinforcement areas, culvert opening, design ef fective width, etc.

STANDARD BAR BENDS

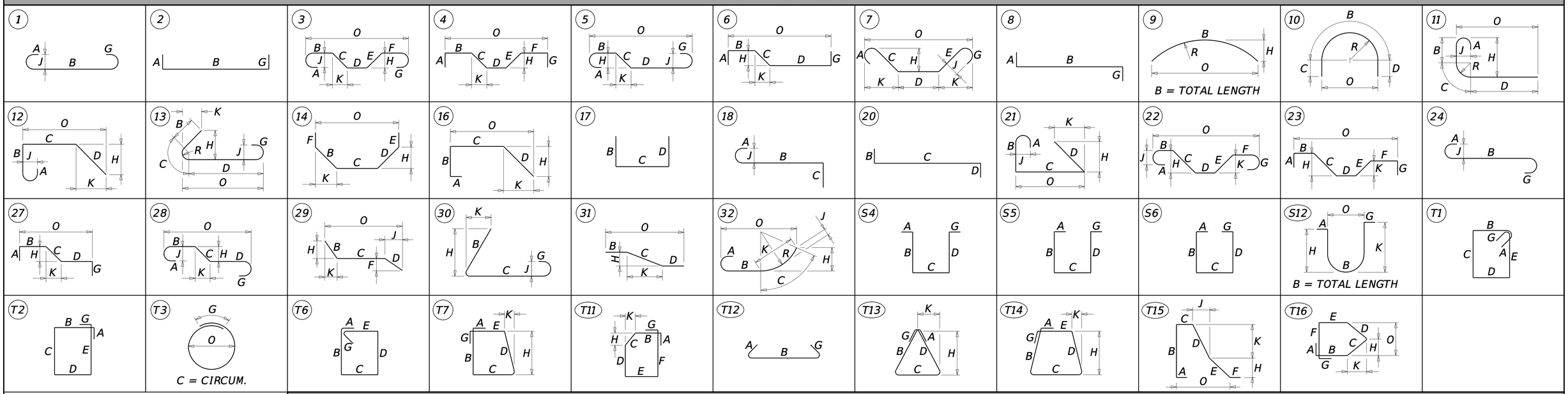

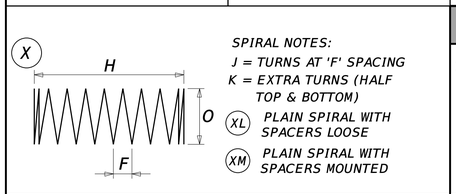

SUPPLEMENTAL BAR BENDS

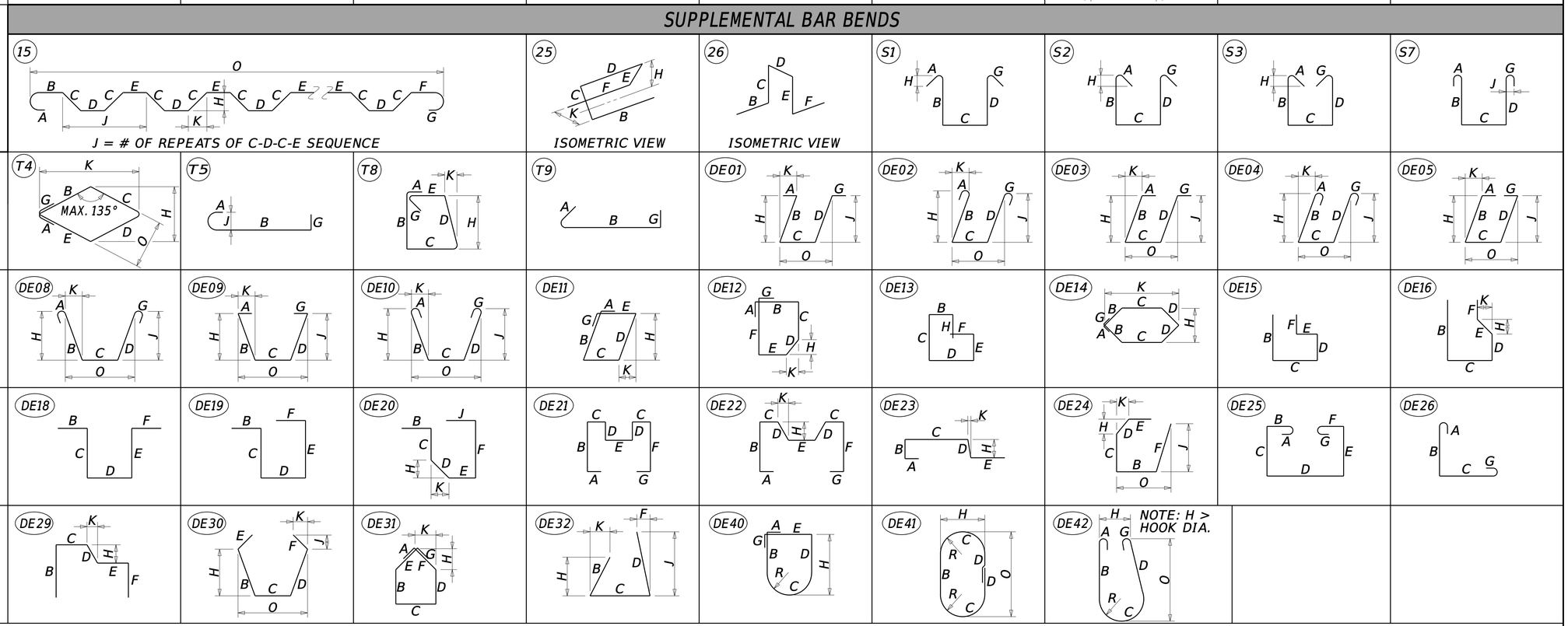

DELAWARE DEPARTMENT OF TRANSPORTATION BRIDGE DESIGN MANUAL	REINFORCEMENT BAR FABRICATION DETAILS	NOT TO SCALE	ISSUE DATE 10/01/2015	DETAIL No. 301.02 SHEET No. 1 of 2

ASTM STANDARD ENGLISH REINFORCING BARS				RECOMMENDED END HOOKS, APPLICABLE TO ALL GRADES				STIRRUP AND TIE HOOKS, APPLICABLE TO ALL GRADES			
	NOMINAL DIMENSIONS				180° HOOKS		90° HOOKS		90° HOOK	135° HOOK	
BAR SIZE	DIAMETER (INCHES)	AREA (INCHES²)	WEIGHT (LBS./FT.)	D	A OR G	J	A OR G	D	A OR G	A OR G	H
3	0.375	0.110	0.376	2¼"	5"	3"	6"	1½"	4"	4"	2½"
4	0.500	0.200	0.668	3"	6"	4"	8"	2"	4½"	4½"	3"
5	0.625	0.310	1.043	3¾"	7"	5"	10"	2½"	6"	5½"	3¾"
6	0.750	0.440	1.502	4½"	8"	6"	1-0"	4½"	1-0"	8"	4½"
7	0.875	0.600	2.044	5¼"	10"	7"	1-2"	5¼"	1-2"	9"	5¼"
8	1.000	0.790	2.670	6"	11"	8"	1-4"	6"	1-4"	10½"	6"
9	1.128	1.000	3.400	9½"	1-3"	11¾"	1-7"				
10	1.270	1.270	4.303	10¾"	1-5"	1-1¼"	1-10"				
11	1.410	1.560	5.313	1-0"	1-7"	1-2¾"	2-0"				
14	1.693	2.250	7.650	1-6¼"	2-3"	1-9¾"	2-7"				
18	2.257	4.000	13.600	2-0"	3-0"	2-4½"	3-5"				

COMMON STOCK STYLES OF WELDED WIRE FABRIC			
STYLE DESIGNATION	STEEL AREA (INCHES² PER FT.)		APPROX. WEIGHT (LBS. PER 100 SQ. FT.)
	LONGIT.	TRANS.	
ROLLS			
6x6-W1.4xW1.4	0.028	0.028	21
6x6-W2.0xW2.0	0.040	0.040	29
6x6-W2.9xW2.9	0.058	0.058	42
6x6-W4.0xW4.0	0.080	0.080	58
4x4-W1.4xW1.4	0.042	0.042	31
4x4-W2.0xW2.0	0.060	0.060	43
4x4-W2.9xW2.9	0.087	0.087	62
4x4-W4.0xW4.0	0.120	0.120	85
3x3-W1.4xW1.4	0.056	0.056	39
SHEETS			
6x6-W2.9xW2.9	0.058	0.058	42
6x6-W4.0xW4.0	0.080	0.080	58
6x6-W5.5xW5.5	0.110	0.110	80
4x4-W4.0xW4.0	0.120	0.120	85

TYPICAL REINFORCEMENT BAR BEND NOTES

1. DETAILS SHOWN ON SHEET 1 REPRESENT BAR BEND TYPES.
2. ALL DIMENSIONS ARE OUT-TO-OUT, EXCEPT "A" AND "G" ON STD. 180° AND 135° HOOKS.
3. "J" DIMENSIONS ON 180° HOOKS TO BE SHOWN ONLY WHERE NECESSARY TO RESTRICT HOOK SIZE, OTHERWISE STANDARD 'ACI' HOOKS ARE TO BE USED.
4. WHERE "J" IS NOT SHOWN, "J" WILL BE KEPT EQUAL TO OR LESS THAN "H" ON TYPES 3, 5 AND 22. WHERE "J" CAN EXCEED "H", IT SHALL BE SHOWN.
5. "H" DIMENSIONS OF STIRRUPS TO BE SHOWN AS NEEDED TO FIT WITHIN THE CONCRETE.
6. UNLESS OTHERWISE NOTED, DIAMETER "D" IS THE SAME FOR ALL BENDS AND HOOKS ON A BAR (EXCEPT FOR BEND TYPES 11 AND 13).
7. WHERE SLOPE DIFFERS FROM 45° OFFSET, "H" AND "K" MUST BE SHOWN.
8. WHERE BARS ARE TO BE BENT MORE ACCURATELY THAN STANDARD BENDING TOLERANCES, BENDING DIMENSIONS REQUIRING CLOSER FABRICATION SHOULD HAVE LIMITS INDICATED.
9. FOR RECOMMENDED DIAMETER "D", OF BENDS, HOOKS, ETC., REFER TO THE TABLE ON THIS SHEET.
10. TYPES S1 - S6, T1 - T3 AND T6 - T9 ARE APPLICABLE TO BAR SIZES #3 THROUGH #8 ONLY.

GENERAL NOTES

1. ALL REINFORCEMENT STEEL BARS SHOWN SHALL MEET THE REQUIREMENTS OF ASTM A615, A706, A767, A775, A955, OR A1035.
2. ALL REINFORCEMENT STEEL BARS SHALL BE DEFORMED UNLESS OTHERWISE SPECIFIED ON THE PLANS.
3. ALL REINFORCEMENT STEEL BARS SHALL BE DENOTED BY ITS BAR SIZE.
4. ALL MARK 'LOCATION PREFIXES' SHALL CONSIST OF TWO LETTERS AND ARE AS FOLLOWS:
   AB = ABUTMENT, AS = APPROACH SLAB, BC = BOX CULVERT, BW = BACKWALL, CL = COLUMN, DK = DECK,
   DL = DOWEL, DP = DIAPHRAGM, FT = FOOTING, HW = HEADWALL, MB = MISC. BARS, MS = MOMENT SLAB,
   PA = PARAPET, PR = PIER, RF = RIGID FRAME, SC = SHEETPILE CAP, SS = SLEEPER SLAB, TW = TOEWALL,
   WL = WALL (UNIQUE LOCATION), AND WW = WINGWALL.
5. BAR MARK SUFFIXES:
   A. SUFFIX 'E' DENOTES EPOXY COATED BAR REINFORCEMENT
   B. SUFFIX 'G' DENOTES GALVANIZED BAR REINFORCEMENT
   C. SUFFIX 'S' DENOTES STAINLESS STEEL BAR REINFORCEMENT

STIRRUP AND TIE HOOKS

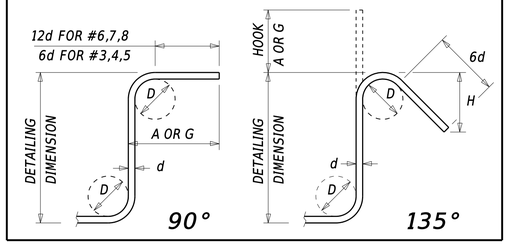

180° AND 90° END HOOKS

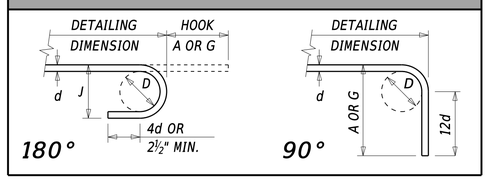

ENLARGED VIEW SHOWING BAR BENDING DETAILS

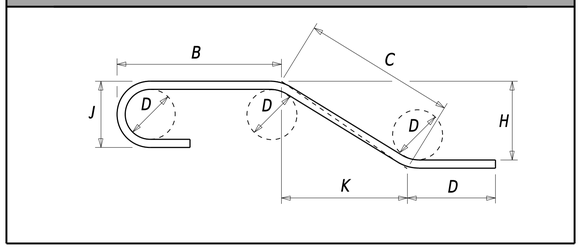

DESIGNER NOTES

1. BAR MARKS MUST BE NAMED IN THE FOLLOWING FORMAT:
   LOCATION PREFIX --> BAR SIZE --> MARK COUNT (TWO DIGITS) --> SUFFIX 'E', 'G', 'S', OR BLANK (FOR BLACK BAR)
   FOR EXAMPLE: AB501E, BW617G, MS537, OR DK719S, ETC.

2. SPLICING & LAPPING OR REINFORCEMENT BARS:
   - ALL INFORMATION PERTAINING TO MINIMUM REQUIRED SPLICING & LAPPING LENGTHS SHOULD BE CLEARLY SHOWN ON THE PLANS.
   - MINIMUM LENGTHS MUST BE IN ACCORDANCE WITH A5.10.8 FOR REINFORCING BARS AND WELDED WIRE FABRIC.
   - INCREASE THE BAR LAPS BY 20% FOR A THREE-BAR BUNDLE. ADD 33% FOR A FOUR-BAR BUNDLE. DO NOT OVERLAP INDIVIDUAL BAR SPLICES WITHIN THE BUNDLE.

3. REFER TO THE ENGINEERING INSTRUCTIONS DOCUMENT: BR-10-001 FOR GUIDANCE ON INSTALLING AND USING THE DELDOT REBAR SHEET PROGRAM. THE DOCUMENT CAN BE FOUND IN THE FOLLOWING LINK:
   http://www.deldot.gov/information/business/drc/pd_files/plan_development/ei-br-10-001_rebar_program.pdf

4. ALL STANDARD BAR BENDS WILL BE INDICATED ON THE REBAR SCHEDULE. THE SUPPLEMENTAL BAR BENDS USED FOR THE PROJECT WILL BE SHOWN ON THE REBAR SCHEDULE.

5. ALL INFORMATION PERTAINING TO WELDED WIRE FABRIC ON THIS SHEET ARE FOR INFORMATION PURPOSES ONLY. WELDED WIRE FABRIC IS NOT INCLUDED IN THE REBAR PROGRAM AND THEREFORE WILL NOT BE SHOWN ON THE REBAR SHEET.

6. DETAILS AND NOTES AS SHOWN UNDER THIS DETAIL ARE SOLELY FOR FABRICATION OF REINFORCEMENT BAR. FOR FURTHER GUIDANCE ON DESIGN AND DETAILING OF BAR REINFORCEMENT, REFER TO SECTIONS 106, 107, 109, AND 205.

7. 'TYPICAL REINFORCEMENT BAR BEND NOTES' ARE AUTOMATICALLY GENERATED BY THE REBAR PROGRAM.

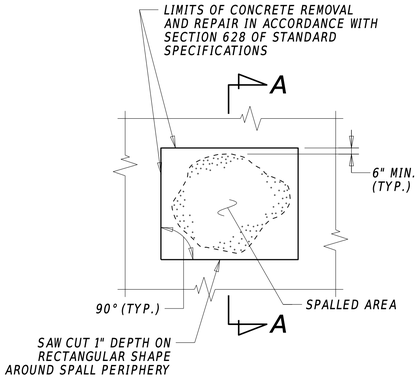

PLAN

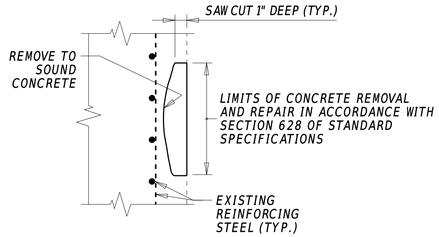

SECTION A-A

SHALLOW SPALL REPAIR

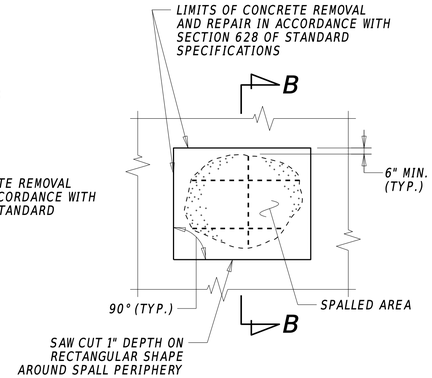

PLAN

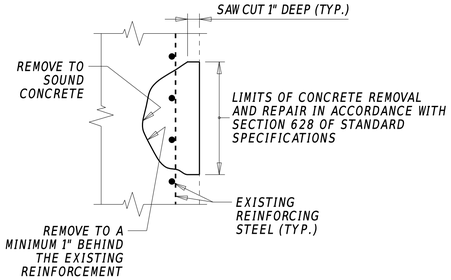

SECTION B-B

DEEP SPALL REPAIR

SHALLOW SPALL REPAIR NOTES

1. SHALLOW SPALLS ARE DEFINED AS PATCHES THAT DO NOT EXTEND BELOW THE TOP MAT OF REBAR.
2. ALL WORK INVOLVING METHODS OF CONCRETE REMOVAL, CLEANING OF CONCRETE SURFACE, SURFACE PREPARATION, AND CONCRETE PLACEMENT SHALL BE PERFORMED IN ACCORDANCE WITH SECTION 628.3.4 OF THE STANDARD SPECIFICATIONS. PAYMENT INCIDENTAL TO 628040 - SHALLOW SPALL REPAIR.

DEEP SPALL REPAIR NOTES

1. DEEP SPALLS ARE DEFINED AS PATCHES THAT EXTEND BELOW THE TOP MAT OF REINFORCEMENT.
2. ALL WORK INVOLVING METHODS OF CONCRETE REMOVAL, CLEANING OF CONCRETE SURFACE AND EXISTING REINFORCEMENT, REPAIRING OR REPLACING DAMAGED REINFORCEMENT AS RESULT OF CONSTRUCTION ACTIVITIES OR SECTION LOSS, PRESENCE OF CONTRACTION OR EXPANSION JOINTS, SURFACE PREPARATION, AND CONCRETE PLACEMENT SHALL BE PERFORMED IN ACCORDANCE WITH SECTION 628.3.4 OF THE STANDARD SPECIFICATIONS. PAYMENT INCIDENTAL TO 628041 - DEEP SPALL REPAIR.

DECK REPAIR NOTES

1. ALL WORK INVOLVING METHODS OF CONCRETE REMOVAL, CLEANING OF CONCRETE SURFACE AND EXISTING REINFORCEMENT, REPAIRING OR REPLACING DAMAGED REINFORCEMENT AS RESULT OF CONSTRUCTION ACTIVITIES OR SECTION LOSS, PRESENCE OF CONTRACTION OR EXPANSION JOINTS, SURFACE PREPARATION, AND CONCRETE PLACEMENT SHALL BE PERFORMED IN ACCORDANCE WITH SECTION 628.3.5 OF THE STANDARD SPECIFICATIONS. PAYMENT INCIDENTAL TO 628050 - DECK REPAIR, ½" TO 1" DEPTH; 628051 - DECK REPAIR, 1" TO 3" DEPTH; 628052 - DECK REPAIR, 3" TO < FULL DEPTH; AND/OR 628053 - DECK REPAIR, FULL DEPTH.
2. MILLING AND OVERLAY SHALL BE PAID FOR UNDER THEIR RESPECTIVE ITEMS.

REHABILITATION OF PCC MASONRY

1. REHABILITATION OF PCC MASONRY IS DEFINED AS DEEP SPALL PATCHES THAT EXCEED THE 0.5 C.Y. THRESHOLD IN A SINGLE AREA.
2. ALL WORK INVOLVING METHODS OF CONCRETE REMOVAL, CLEANING OF CONCRETE SURFACE AND EXISTING REINFORCEMENT, REPAIRING OR REPLACING DAMAGED REINFORCEMENT AS RESULT OF CONSTRUCTION ACTIVITIES OR SECTION LOSS, PRESENCE OF CONTRACTION OR EXPANSION JOINTS, SURFACE PREPARATION, AND CONCRETE PLACEMENT SHALL BE PERFORMED IN ACCORDANCE WITH SECTION 628.3.4 OF THE STANDARD SPECIFICATIONS. PAYMENT INCIDENTAL TO 628042 - REHABILITATION OF PCC MASONRY.

REHABILITATION WORK WITHIN THE SPLASH ZONE OR UNDERWATER

1. (for projects where rehabilitation work occurs within the splash zone or underwater) FOR ANY REMOVAL OR REHABILITATION WORK TO TAKE PLACE WITHIN THE SPLASH ZONE OR UNDERWATER, SUBMIT A CONCRETE REPAIR WORKING DRAWING FOR THE PROPOSED REPAIR MEANS AND METHODS.

DESIGNER NOTES

1. THE DETAILS DEPICTED ON THIS SHEET ARE LARGELY DERIVED FROM SECTION 628 OF THE STANDARD SPECIFICATIONS. THE PURPOSE OF THE DETAILS SHOWN ON THIS SHEET IS TO ASSIST WITH VISUALIZING THE REPAIR METHODS TYPICALLY USED ON DELDOT PROJECTS.
2. THE DETAILS AND NOTES AS SHOWN ON THIS SHEET ARE REQUIRED TO BE SHOWN ON PLAN SETS WHICH REQUIRE SUCH REPAIRS.
3. IF SUCH INFORMATION IS READILY AVAILABLE DURING PLAN DEVELOPMENT, THE DESIGNER SHOULD SHOW ON THE PLANS THE APPROXIMATE LOCATIONS AND DIMENSIONS OF THE SPALL REPAIRS AT BOTH SUBSTRUCTURE AND DECK LOCATIONS. THE QUANTITY CALCULATIONS SHOULD ALSO CLEARLY IDENTIFY AND EXPLAIN IN DEPTH WHICH ITEMS ARE TO BE USED AND THEIR ESTIMATED QUANTITIES AT EACH LOCATIONS, WITH ANY CONTINGENCIES OR TOKEN QUANTITIES ASSUMED.
4. THE DETAILS SHOWN FOR 'REHABILITATION OF PCC MASONRY' UTILIZES AN EXAMPLE USING PARTIAL RECONSTRUCTION OF AN EXISTING PIER CAP. THE DESIGNER SHOULD SHOW APPROXIMATE LOCATIONS AND ESTIMATED QUANTITY OF CONCRETE TO BE REMOVED AT EACH STRUCTURAL UNIT ON THE PLANS WHICH REQUIRE PARTIAL RECONSTRUCTION.
5. REPAIR DETAILS FOR PRESTRESSED OR POST-TENSIONED CONCRETE ELEMENTS WERE INTENTIONALLY OMITTED FROM THIS DETAIL. THESE TYPES OF REPAIRS ARE UNIQUE AND WILL VARY FROM PROJECT TO PROJECT. THE DESIGNER IS RESPONSIBLE FOR DEVELOPING APPROPRIATE REPAIR DETAILS FOR THESE TYPES OF CONCRETE ELEMENTS.
6. REHABILITATION WORK BENEATH AN EXISTING BRIDGE AND NEAR THE WATERLINE CAN BE DIFFICULT TO ACCOMPLISH, ESPECIALLY WITHIN THE SPLASH ZONE (PILE BENT STRUTS CAN BE PARTICULARLY PROBLEMATIC). SINCE THE DETERIORATED ELEMENT CANNOT BE ISOLATED WITHIN A COFFERDAM, THE REPAIR HAS TO BE COMPLETED WHILE WORKING AROUND SITE CONDITIONS. WHERE APPROPRIATE, INCLUDE THE PROJECT NOTE FOR WORKING DRAWINGS TO ESTABLISH A PLAN FOR EXECUTING THE WORK PRIOR TO CONSTRUCTION. SEE SECTION 109.11.3.3 FOR MORE INFORMATION.

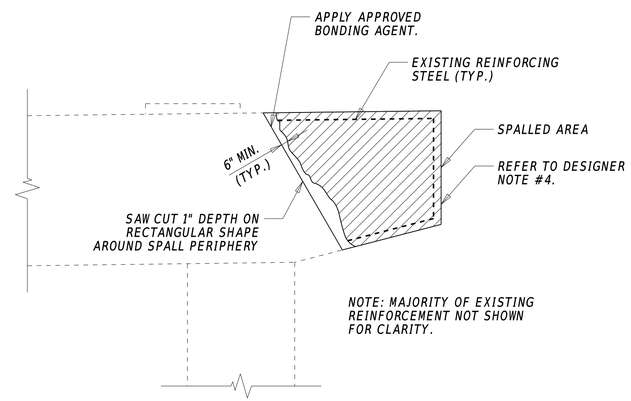

REHABILITATION OF PCC MASONRY

See Designer Note 4

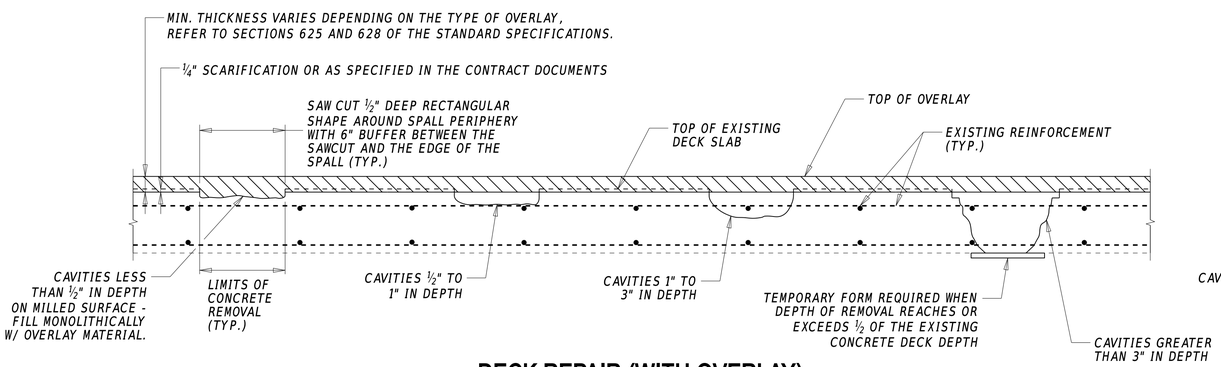

DECK REPAIR (WITH OVERLAY)

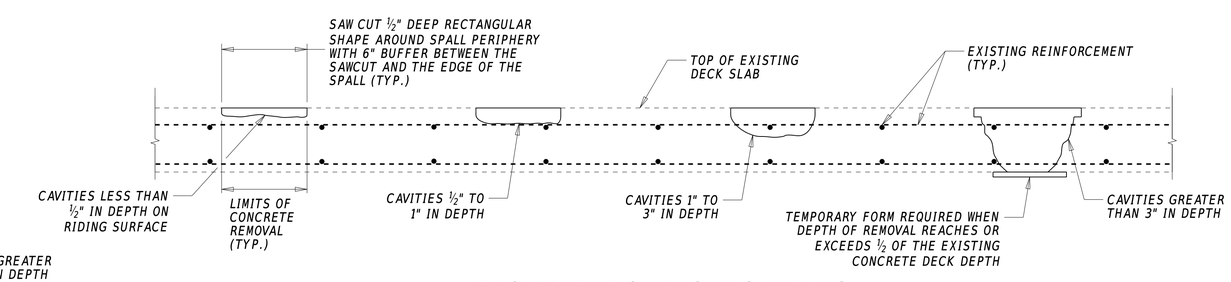

DECK REPAIR (WITHOUT OVERLAY)

DELAWARE DEPARTMENT OF TRANSPORTATION BRIDGE DESIGN MANUAL	CONCRETE REPAIR DETAILS	NOT TO SCALE	ISSUE DATE: 10/01/2015, 2022; 10/01/2016; 01/31/2019 — DETAIL No. 301.03 — SHEET No. 1 of 1

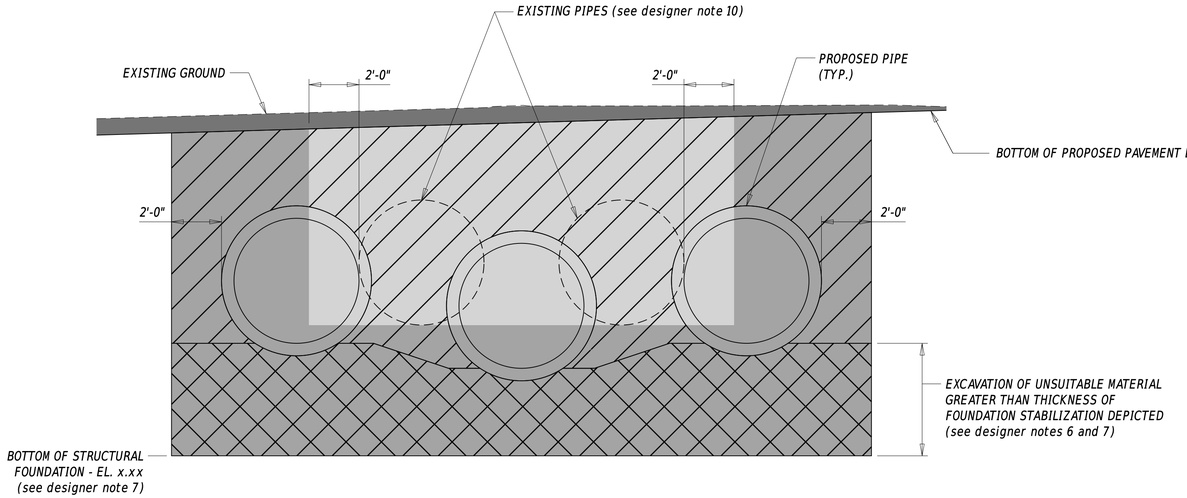

EXAMPLE 1

See Designer Note 1

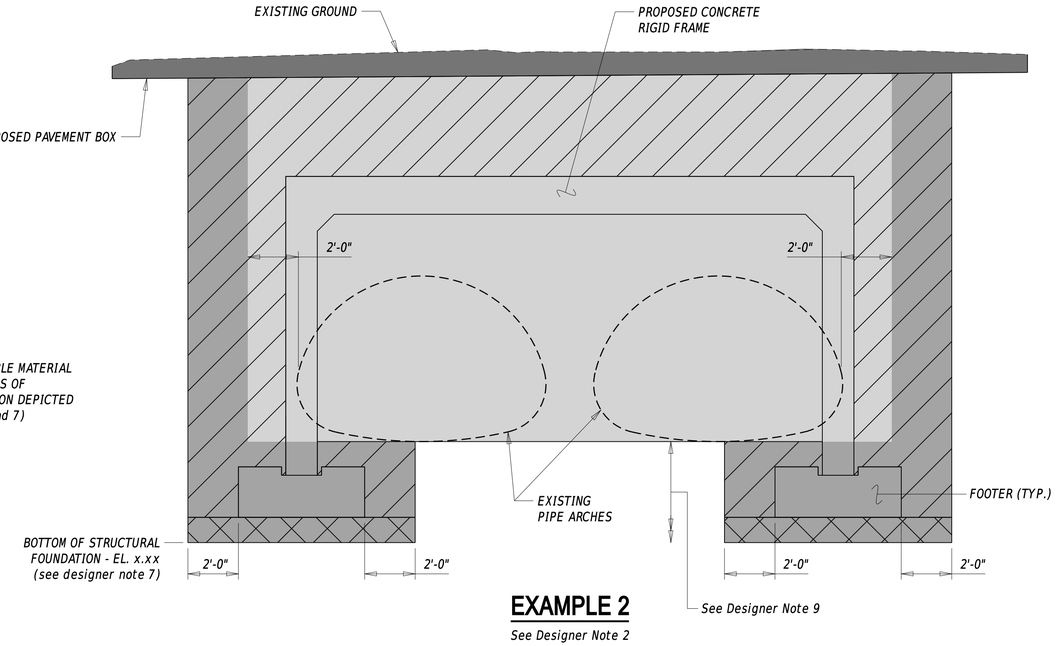

EXAMPLE 2

See Designer Note 2

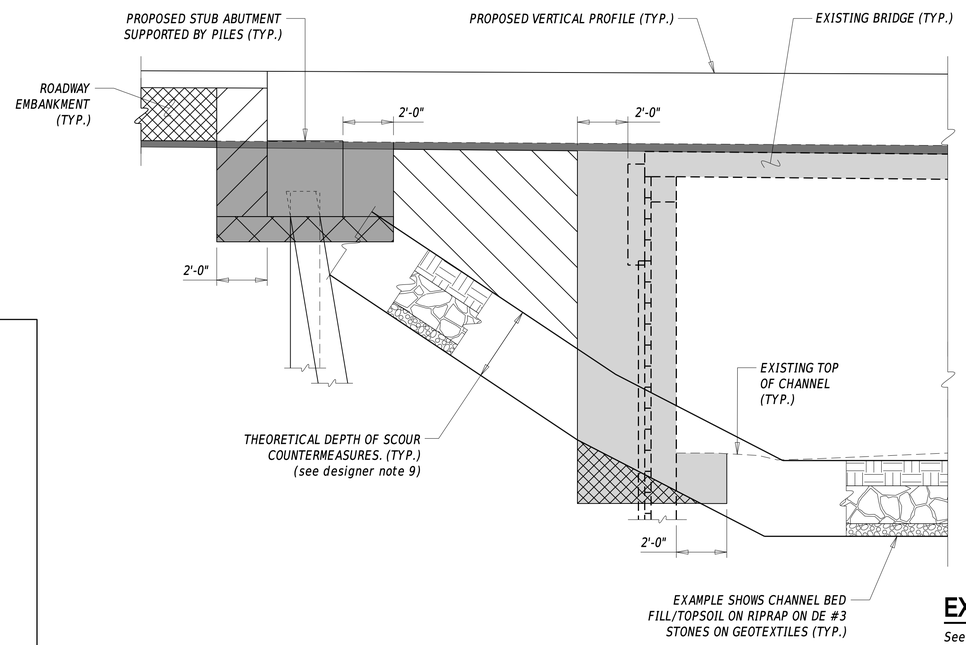

EXAMPLE 3

See Designer Note 3

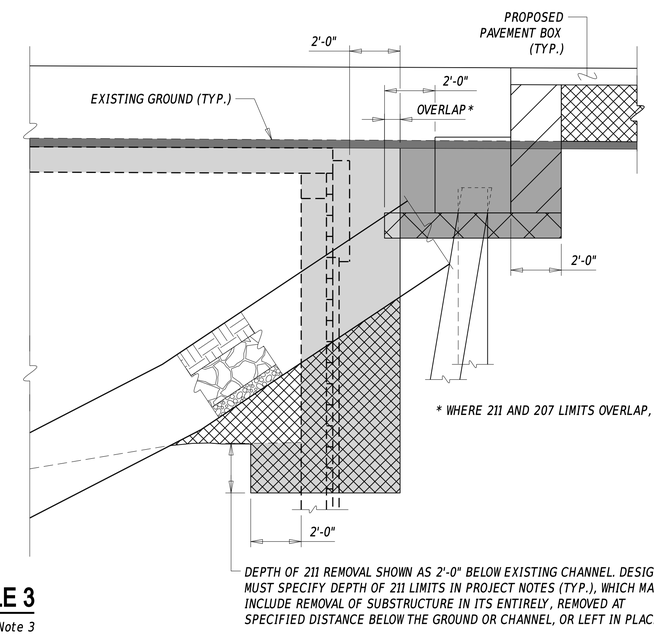

* WHERE 211 AND 207 LIMITS OVERLAP, 211 GOVERNS.

- = 211000 - REMOVAL OF STRUCTURES AND OBSTRUCTIONS
- = 207000 - PIPE, CULVERT AND STRUCTURE EXCAVATION
- = 202000 - EXCAVATION AND EMBANKMENT
- = 203000 - CHANNEL EXCAVATION (see designer note 13)
- = 207001 - PIPE, CULVERT AND STRUCTURE BACKFILLING (see designer note 8) or (for pipes only) 208000 - FLOWABLE FILL or 610015 - PCC MASONRY, CLASS C
- = SUBFOUNDATION MATERIAL DETERMINED BY DESIGN (see designer note 6)
- = 209XXX - BORROW TYPE (A, B, C, OR F) DETERMINED BY DESIGN

DELDOT BRIDGE DESIGN SECTION	DELAWARE DEPARTMENT OF TRANSPORTATION BRIDGE DESIGN MANUAL	EXCAVATION AND BACKFILL PAY LIMIT DETAILS	NOT TO SCALE	ISSUE DATE 10/01/2016 2022 — DETAIL No. 301.04 — SHEET No. 1 of 2

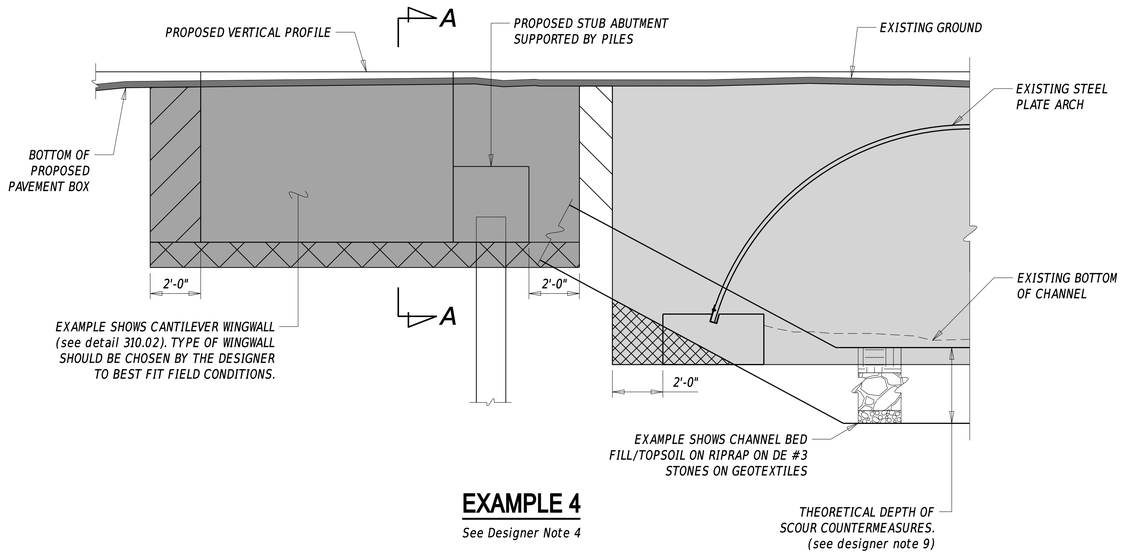

EXAMPLE 4

See Designer Note 4

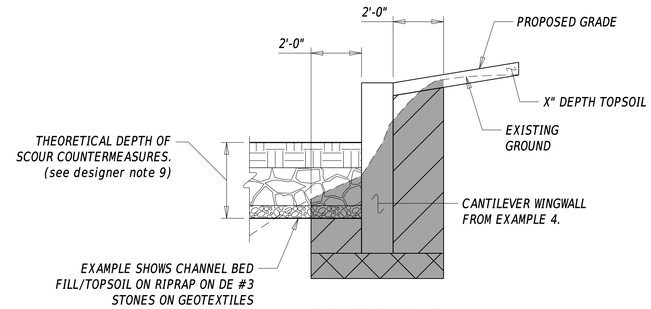

SECTION A-A

See Designer Note 4

- = 211000 - REMOVAL OF STRUCTURES AND OBSTRUCTIONS
- = 207000 - PIPE, CULVERT AND STRUCTURE EXCAVATION
- = 202000 - EXCAVATION AND EMBANKMENT
- = 203000 - CHANNEL EXCAVATION (see designer note 13)
- = 207001 - PIPE, CULVERT AND STRUCTURE BACKFILLING (see designer note 8) or (for pipes only) 208000 - FLOWABLE FILL or 610015 - PCC CONCRETE, CLASS C
- = SUBFOUNDATION MATERIAL DETERMINED BY DESIGN (see designer note 6)
- = 209XXX - BORROW TYPE (A, B, C, OR F) DETERMINED BY DESIGN

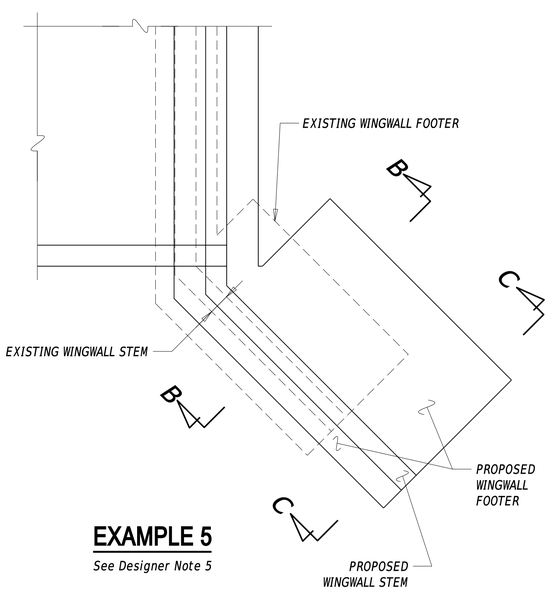

EXAMPLE 5

See Designer Note 5

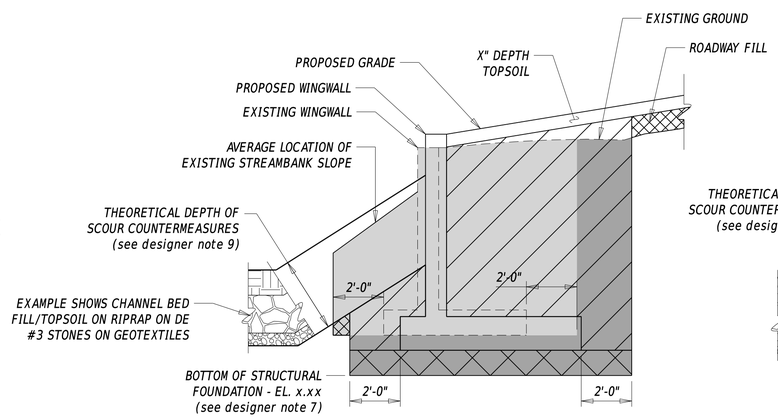

SECTION B-B

See Designer Note 5

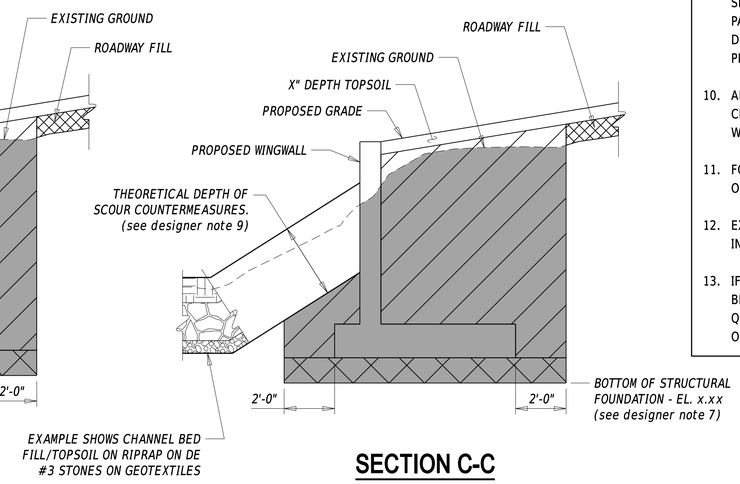

SECTION C-C

See Designer Note 5

DESIGNER NOTES

1. EXAMPLE 1 ASSUMES THAT THREE 5'-0" DIA. REINFORCED CONCRETE PIPES REPLACE TWO EXISTING 5'-0" CORRUGATED METAL PIPES. IT IS ASSUMED THAT EXTRA EXCAVATION OF 3'-6" BELOW BOTTOM OF THE LOW FLOW CHANNEL PIPE IS REQUIRED.
2. EXAMPLE 2 ASSUMES THAT A CONCRETE RIGID FRAME (20'-0" CLEAR SPAN) REPLACES TWO EXISTING 117" X 79" PIPE ARCHES. IT IS ASSUMED THAT EXTRA EXCAVATION BELOW PIPES IS NOT REQUIRED.
3. EXAMPLE 3 ASSUMES THAT PRESTRESSED ADJACENT CONCRETE BOX BEAMS ATOP STUB ABUTMENTS WITH DECK SLAB POUROVER ON PILES REPLACE EXISTING TIMBER BRIDGE (35'-0" SPAN) SUPPORTED BY TIMBER SUBSTRUCTURE ON TIMBER PILES. IT IS ASSUMED THAT THE NEW VERTICAL PROFILE IS APPROXIMATELY 2'-9" HIGHER THAN THE EXISTING VERTICAL PROFILE AND ALSO THAT THE EXISTING BRIDGE IS NOT IN CENTER OF CHANNEL. SUPERSTRUCTURE NOT SHOWN FOR CLARITY.
4. EXAMPLE 4 ASSUMES THAT PRESTRESSED ADJACENT CONCRETE BOX BEAMS ATOP STUB ABUTMENTS WITH DECK SLAB POUROVER ON PILES REPLACE EXISTING 20'-0" WIDE STEEL PLATE ARCH SUPPORTED BY CONCRETE FOOTERS. IT IS ASSUMED THAT CANTILEVER WINGWALLS ARE REQUIRED. SUPERSTRUCTURE NOT SHOWN FOR CLARITY.
5. EXAMPLE 5 ASSUMES THAT WINGWALLS FOR A CONCRETE RIGID FRAME REPLACE SMALLER EXISTING CONCRETE RIGID FRAME WINGWALLS. ASSUME BOTH WINGWALLS ARE FLARED AT 45 DEGREES.
6. FOR MORE INFORMATION ON DETERMINING THE APPROPRIATE TYPE OF SUBFOUNDATION MATERIAL(S), REFER TO ENGINEERING INSTRUCTIONS 16-001 - 'GUIDANCE FOR EXCAVATION OF UNSUITABLE MATERIALS'.
7. WHEN IDENTIFIED DURING DESIGN, EXCAVATION OF UNSUITABLE MATERIAL IS INCLUDED IN THE PLAN QUANTITY FOR ITEM 207000 - PIPE, CULVERT OR STRUCTURE EXCAVATION. FOR PIPES, CULVERTS AND SPREAD FOOTINGS, THE LOWER LIMIT OF THE EXCAVATION IS IDENTIFIED ON THE PLANS AS THE BOTTOM OF STRUCTURAL FOUNDATION. REPLACE UNSUITABLE MATERIAL WITH APPROPRIATE SUBFOUNDATION MATERIAL(S). SPECIFICATION TABLE 207-A APPLIES WHEN UNSUITABLE MATERIAL, OUTSIDE OF THE PRESCRIBED LIMITS, IS UNEXPECTEDLY ENCOUNTERED DURING CONSTRUCTION.
8. PROVIDE BACKFILL MATERIAL UNDER ITEMS 207020 STRUCTURAL BACKFILL, BORROW TYPE B, PROVIDING ONLY OR 207021 STRUCTURAL BACKFILL, BORROW TYPE C, PROVIDING ONLY FOR USE WITH ITEM 207001 PIPE, CULVERT OR STRUCTURE BACKFILLING. FOR QUANTITY CALCULATION PURPOSES, COMPUTE THE BACKFILLING ITEM VOLUME, THEN APPLY A 1.3 COMPACTION FACTOR TO DETERMINE QUANTITIES FOR THE PROVIDING STRUCTURAL BACKFILL ITEMS.
9. POTENTIAL EXCAVATION FOR PLACEMENT OF SCOUR COUNTERMEASURES NOT SHOWN IN EXAMPLE 2. EXCAVATION FOR SCOUR COUNTERMEASURES WILL BE PAID FOR UNDER RESPECTIVE SCOUR COUNTERMEASURE ITEM(S). REFER TO DETAILS 350.01, 355.01, AND 360.01 FOR ADDITIONAL INFORMATION ON PLACEMENT OF SCOUR COUNTERMEASURES.
10. ALL EXISTING PIPES SHOWN IN THIS DETAIL ARE ASSUMED TO BE PIPES CLASSIFIED AS A BRIDGE. REMOVAL FOR ALL PIPES NOT CLASSIFIED AS BRIDGES WILL BE PER DELDOT STANDARD SPECIFICATIONS.
11. FOR ADDITIONAL INFORMATION, REFER TO SECTIONS 202, 203, 207, AND 211 OF THE DELDOT STANDARD SPECIFICATIONS.
12. EXCAVATION AND BACKFILL PAY LIMITS SHOULD BE SHOWN ON PLANS AND INCLUDED IN QUANTITY CALCULATIONS REPORT.
13. IF THE TOTAL QUANTITY FOR 203000 - CHANNEL EXCAVATION IS CALCULATED TO BE LESS THAN 20 CUBIC YARDS, THE DESIGNER MAY INCLUDE THE SMALL QUANTITY UNDER 207000 IN LIEU OF USING 203000 AND MUST MAKE A NOTE OF THIS IN THE PLANS AND QUANTITY CALCULATIONS.

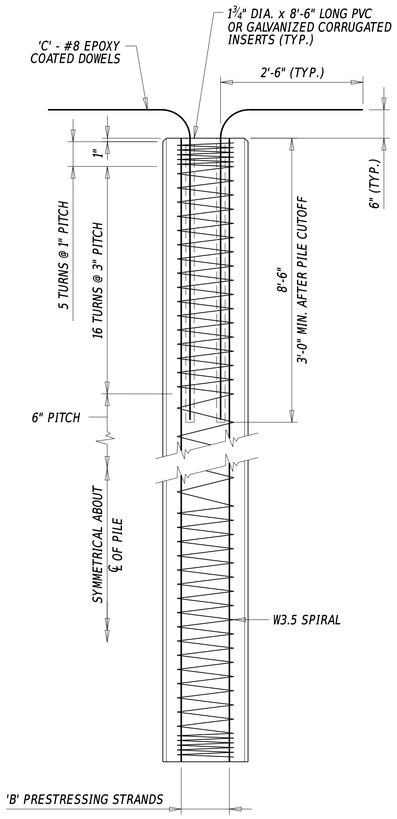

PILE ELEVATION

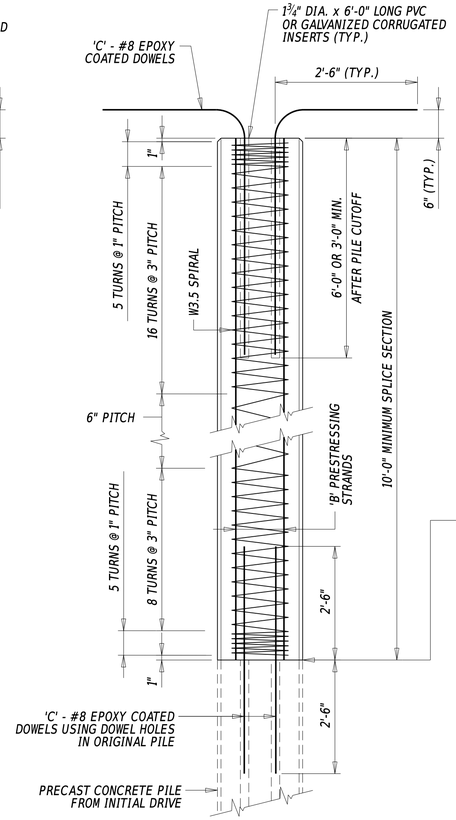

PILE BUILD-UP FOR DRIVING (PRECAST)

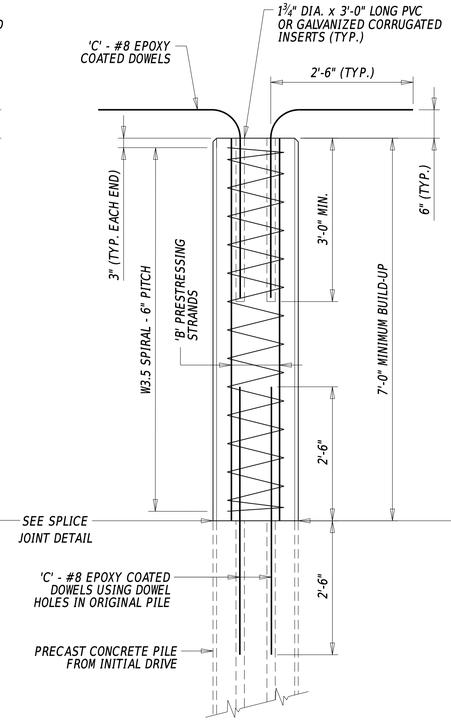

PILE BUILD-UP WITHOUT DRIVING (PRECAST)

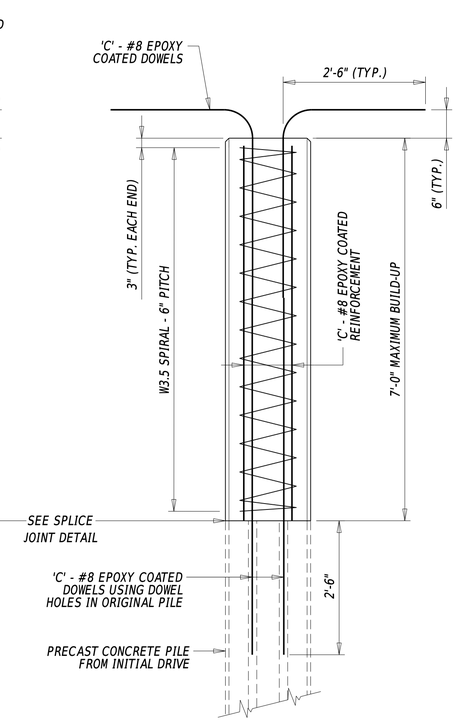

PILE BUILD-UP WITHOUT DRIVING (CAST-IN-PLACE)

PRECAST PRESTRESSED CONCRETE PILE SIZES		
PILE SIZE 'A'	STRANDS 'B'	DOWELS 'C'
12"	6	4
14"	8	4
16"	10	6
18"	12	8
20"	16	8
24"	24	12

PROJECT SPECIFIC PILE NOTES

1. PILE TYPE:
   THIS PROJECT WILL UTILIZE __" x __" PRESTRESSED-PRECAST CONCRETE PILES.
2. ESTIMATED PRODUCTION PILE LENGTH IS ___'. (See Designer Note 2)
3. REQUIRED TEST PILE LENGTH IS __' LONGER THAN THE ESTIMATED PRODUCTION PILE LENGTH. (See Designer Note 3)
4. DRIVE PILES TO A BEARING RESISTANCE OF ___ KIPS USING A RESISTANCE FACTOR OF ____.
5. MINIMUM TIP ELEVATION WILL NOT BE REQUIRED FOR THIS PROJECT or REFER TO THE PILE INSTALLATION DATA TABLE FOR MINIMUM TIP ELEVATION.
6. DESIGN ASSUMPTIONS: THE PRESTRESSED CONCRETE PILES WERE DESIGNED FOR (NORMAL EXPOSURE or SEVERE CORROSIVE CONDITIONS).
7. if using accelerated bridge construction, see Designer Note 12.

GENERAL PILE NOTES

1. FOR MORE INFORMATION REGARDING PILE DRIVING, INSTALLATION, MATERIALS, AND FABRICATION, REFER TO SECTION 605 - DRIVEN PILES OF THE STANDARD SPECIFICATIONS.
2. (See Designer Notes 2, 3 and 4)
   (A) DRIVE TEST PILES AT EACH LOCATION SHOWN ON THE PLANS. PRODUCTION PILES WILL BE ORDERED BASED ON THE RESULTS OF THE TEST PILE DRIVING.
   or
   (B) ORDER SAME LENGTH FOR ALL PILES (i.e. WITHOUT A LONGER TEST PILE). TEST PILES, AS NOTED, WILL BE DRIVEN FIRST TO ESTABLISH DRIVING CRITERIA FOR THE OTHER PILES IN EACH SUBSTRUCTURE ELEMENT. AN ADDITIONAL __' HAS BEEN ADDED TO THE DESIGN LENGTH OF EACH PILE AS A CONTINGENCY.

PRESTRESSED-PRECAST CONCRETE PILE NOTES

1. PROTECT ALL REINFORCING STEEL WITH FUSION BONDED EPOXY.
2. EPOXY GROUT FOR GROUTING THE DOWEL BARS IN THE TOP OF THE PRESTRESSED-PRECAST CONCRETE PILE MUST BE AN APPROVED NON-SHRINK EPOXY GROUT SPECIFICALLY DESIGNED AS A FAST SETTING COMPOUND THAT POURS EASILY TO FILL THE VOIDS. THE COST OF GROUTING THE DOWEL BARS IS INCIDENTAL TO THE RESPECTIVE PILE.
3. THE CONTRACTOR MAY CONSIDER USING ALTERNATIVE PILE BUILD-UP DETAILS FOR BOTH DRIVING AND WITHOUT DRIVING. SUBMIT ALTERNATIVE DETAILS FOR PILE BUILD-UPS TO THE DEPARTMENT FOR APPROVAL.
4. THE CONTRACTOR MAY CONSIDER USING ALTERNATIVE SPLICE JOINT DETAIL. SUBMIT ALTERNATIVE DETAILS FOR SPLICE JOINT TO THE DEPARTMENT FOR APPROVAL.

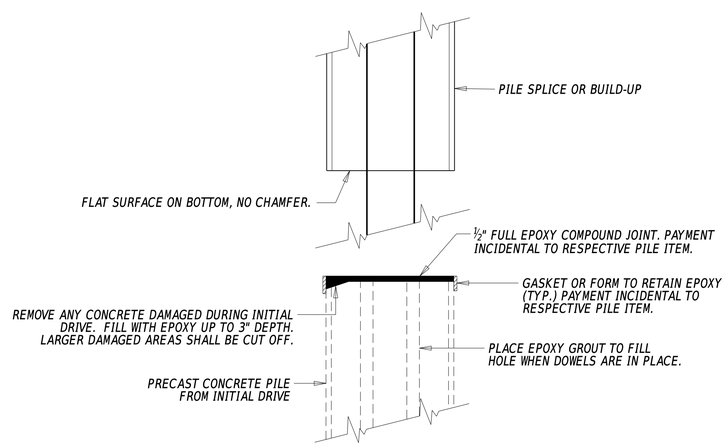

SPLICE JOINT DETAIL

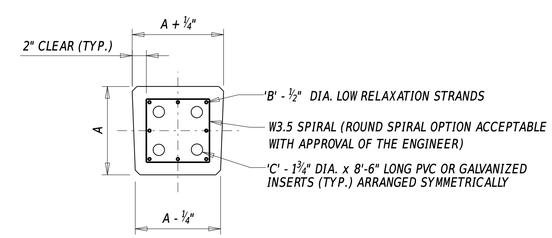

TYPICAL PRECAST PILE SECTION

PILE INSTALLATION DATA					
SUBSTRUCTURE UNIT	DESIGN DATA		ACTUAL FIELD DATA		
	MINIMUM TIP ELEVATION	ESTIMATED PILE TIP ELEVATION	ACTUAL MINIMUM TIP ELEVATION	ACTUAL AVERAGE TIP ELEVATION	ACTUAL MAXIMUM TIP ELEVATION

(See Designer Note 6)

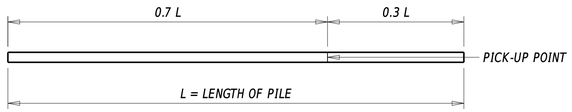

1-POINT

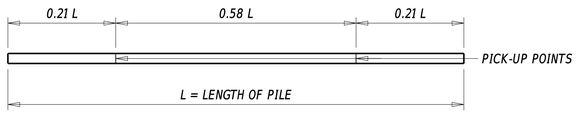

2-POINT

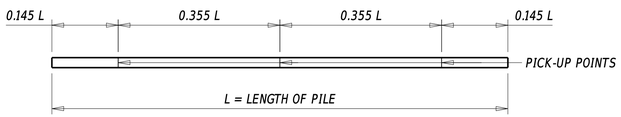

3-POINT

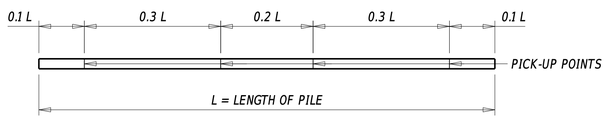

4-POINT

PICK-UP DIAGRAMS

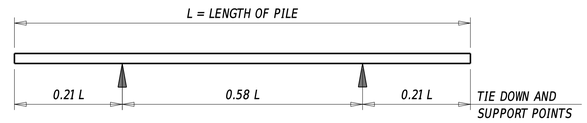

2-POINT

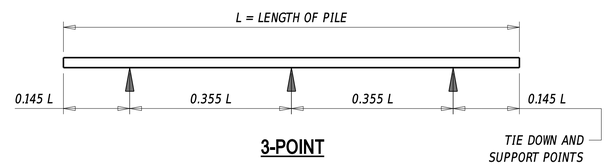

3-POINT

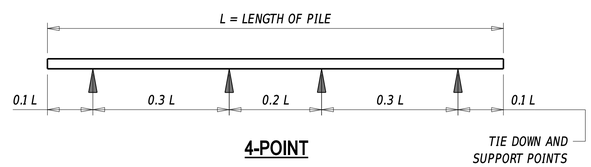

4-POINT

SUPPORT DIAGRAMS FOR STORAGE AND TRANSPORTATION

MAXIMUM PILE PICK-UP AND SUPPORT LENGTHS

PICK-UP METHOD	PILE SIZE 12"	PILE SIZE 14"	PILE SIZE 16"	PILE SIZE 18"	PILE SIZE 20"	PILE SIZE 24"	REQUIRED SUPPORT METHOD
1-POINT	62'	67'	70'	73'	79'	88'	2, 3, OR 4-POINT
2-POINT	88'	94'	99'	103'	112'	125'	2, 3, OR 4-POINT
3-POINT	126'	135'	142'	148'	160'	179'	3 OR 4-POINT
4-POINT	177'	189'	199'	207'	225'	250'	4-POINT

NOTE:
1. THE PICK-UP DIAGRAMS, SUPPORT DIAGRAMS FOR STORAGE AND TRANSPORTATION, AND THE 'MAXIMUM PILE PICK-UP AND SUPPORT LENGTHS' TABLE ARE FOR INFORMATION PURPOSES ONLY AND SHOULD NOT BE INCLUDED ON THE PLAN SET.

2. THE 'MAXIMUM PILE PICK-UP AND SUPPORT LENGTHS' TABLE IS BASED ON THE COMPRESSIVE STRENGTH (f'ci) AT THE TIME OF INITIAL RELEASE AT 4800 psi.

3. THE DESIGNER MUST CONSIDER THE POSSIBILITY THAT THE CONTRACTOR WILL POSITION PILE INTO PLACE FOR DRIVING USING THE ONE-POINT PICK-UP METHOD. THEREFORE IT IS RECOMMENDED THAT THE PILE LENGTH BE LIMITED TO THE MAXIMUM LENGTH FOR THE ONE-POINT PICK-UP METHOD.

DESIGNER NOTES

1. 'PROJECT SPECIFIC PILE NOTES', 'GENERAL PILE NOTES', AND 'PRESTRESSED-PRECAST CONCRETE PILE NOTES' ARE REQUIRED TO BE SHOWN ON THE PLAN SETS.

2. UNDER 'PROJECT SPECIFIC PILE NOTES', NOTE 2, THE ESTIMATED PRODUCTION PILE LENGTH SHOULD BE EQUAL TO THE ESTIMATED DESIGN PILE LENGTH IF 'GENERAL PILE NOTES', NOTE 2(A) IS USED. IF 'GENERAL PILE NOTES', NOTE 2(B) IS USED, THEN THE ESTIMATED PRODUCTION PILE LENGTH SHOULD BE EQUAL TO THE ESTIMATED DESIGN PILE LENGTH + 5'-0".

3. UNDER 'PROJECT SPECIFIC PILE NOTES', NOTE 3, THE REQUIRED TEST PILE LENGTH SHOULD BE 10'-0" LONGER THAN THE ESTIMATED PRODUCTION PILE LENGTH IF 'GENERAL PILE NOTES', NOTE 2(A) IS USED. IF 'GENERAL PILE NOTES', NOTE 2(B) IS USED, THEN THE REQUIRED TEST PILE LENGTH SHOULD BE EQUAL TO THE ESTIMATED PRODUCTION PILE LENGTH + 5'-0".

4. UNDER 'GENERAL PILE NOTES', NOTE 2, THE DESIGNER MUST CHOOSE BETWEEN 2(A) AND 2(B) AND DELETE THE NOTE CONTAINING THE METHOD NOT USED FOR THE PROJECT. METHOD 2(A) SHOULD BE USED IF THERE IS SUFFICIENT TIME FOR THE CONTRACTOR TO ORDER PRODUCTION PILES BASED ON TEST PILE RESULTS. THIS TYPICALLY APPLIES ONLY TO LARGER-SIZED PROJECTS OR WHEN PILE DRIVING IS NOT THE CRITICAL PATH. METHOD 2(B) IS MORE COMMON DUE TO TIME CONSTRAINTS IN THE CONSTRUCTION SCHEDULE AND THEREFORE IS USED FOR MAJORITY OF DELDOT PROJECTS.

5. AS PER SECTION 612 - PRECAST CONCRETE OF THE STANDARD SPECIFICATIONS, UNLESS OTHERWISE NOTED ON THE PLANS, THE 28-DAY COMPRESSIVE STRENGTH (f'c) OF THE PRESTRESSED-PRECAST CONCRETE PILE IS ASSUMED TO BE 6000 psi WITH A COMPRESSIVE STRENGTH (f'ci) AT THE TIME OF INITIAL RELEASE AT 4800 psi.

6. THE 'PILE INSTALLATION DATA' TABLE SHOULD BE USED FOR ALL PROJECTS. IF MINIMUM TIP ELEVATION IS NOT REQUIRED FOR THE PROJECT, THE DESIGNER SHOULD SIMPLY PLACE 'N/A' UNDER THE 'MINIMUM TIP ELEVATION' COLUMN. THE 'ACTUAL FIELD DATA' INFORMATION SHOULD BE FILLED OUT BY THE FIELD INSPECTOR AND INCLUDED IN THE AS-BUILT DRAWINGS.

7. THE DESIGNER MUST EVALUATE THE STRUCTURAL CAPACITY OF THE PILE FOR ANTICIPATED DRIVING CONDITIONS AND WHEN STRENGTH I LOADS ARE APPLIED TO THE PILES AS PART OF PILE SIZING SELECTION.

8. THE PILE BUILD-UP AND SPLICE JOINT DETAILS AS SHOWN ON SHEET 1 ARE RECOMMENDED. THE CONTRACTOR SHOULD BE ENCOURAGED TO SUBMIT ALTERNATIVE DETAILS IF SUCH DETAILS REDUCES CONSTRUCTION TIME AND/OR THE TOTAL CONSTRUCTION COSTS.

9. THE DESIGNER MUST DETERMINE WHETHER THE PILE BE CLASSIFIED AS 'FREE HEAD' OR 'FIXED HEAD'.

   (a)STANDARD DELDOT PRACTICE REQUIRES THE TOP OF PILE TO PROJECT A MINIMUM OF 12" INTO THE PILE CAP AFTER ALL DAMAGED MATERIAL HAS BEEN REMOVED WHILE MEETING REQUIRED QUANTITY OF DOWELS 'C' IN THE TABLE PROVIDED ON SHEET 1. PILES MEETING THESE MINIMUM REQUIREMENTS WILL BE CONSIDERED AS 'FREE HEAD'.

   (b)FOR A PILE TO BE CLASSIFIED AS 'FIXED HEAD', THE PILE MUST MEET ALL THE REQUIREMENTS AS SPECIFIED IN 9(a) WITH EXCEPTION THAT TOP OF PILE MUST PROJECT INTO THE PILE CAP A MINIMUM OF 2*PILE DIA. AFTER ALL DAMAGED MATERIAL HAVE BEEN REMOVED.

10. FOR PILE BENTS, THE DESIGNER MUST DETERMINE THE POINT OF FIXITY AS PER A10.7.3.13 AND SECTION 107.5.4. FURTHERMORE, THE DESIGNER MUST CONSIDER THE SLENDERNESS RATIO WHEN SELECTING THE PILE SIZE FOR BOTH PRODUCTION AND TEST PILES.

11. REFER TO SECTION 107.3.4.1 FOR MORE INFORMATION ON PRESTRESSED-PRECAST CONCRETE PILES.

12. FOR CERTAIN TYPES OF CONSTRUCTION SUCH AS ACCELERATED BRIDGE CONSTRUCTION WITH PRECAST CONCRETE SUBSTRUCTURES, CONSIDER ADDING A NEW NOTE UNDER 'PROJECT SPECIFIC PILE NOTES' ASSIGNING A VALUE OF LESS THAN 3 INCHES SPECIFIED IN SECTION 605.3.4.B.9 OF STANDARD SPECIFICATIONS FOR MAXIMUM ALLOWABLE VARIATION AT THE TOP OF THE PILE IN ANY DIRECTION FROM THE LOCATION SHOWN IN THE CONTRACT DOCUMENTS.

PROJECT SPECIFIC PILE NOTES

1. *PILE TYPE:*
   THIS PROJECT WILL UTILIZE __" DIA. CAST-IN-PLACE PILES, _ GAGE. THE TAPERED END SECTION WILL BE A "_" TAPER (____" IN/FT), 8" POINT DIAMETER x __" BUTT DIAMETER x __' LENGTH. EXTEND THE REINFORCEMENT INTO THE PILE THE MINIMUM OF 20'-0" OR THE STRAIGHT PORTION OF THE PILE.
2. *ESTIMATED PRODUCTION PILE LENGTH IS ___'.*
3. *REQUIRED TEST PILE LENGTH IS __' LONGER THAN THE ESTIMATED PRODUCTION PILE LENGTH.*
4. *DRIVE PILES TO A BEARING RESISTANCE OF ___ KIPS USING A RESISTANCE FACTOR OF ____.*
5. *MINIMUM TIP ELEVATION WILL NOT BE REQUIRED FOR THIS PROJECT or REFER TO THE PILE INSTALLATION DATA TABLE FOR MINIMUM TIP ELEVATION.*

GENERAL PILE NOTES

1. *FOR MORE INFORMATION REGARDING PILE DRIVING, INSTALLATION, MATERIALS, AND FABRICATION, REFER TO SECTION 605 - DRIVEN PILES OF THE STANDARD SPECIFICATIONS.*
2. *(A) DRIVE TEST PILES AT EACH LOCATION SHOWN ON THE PLANS. PRODUCTION PILES WILL BE ORDERED BASED ON THE RESULTS OF THE TEST PILE DRIVING.*

or

(B) ORDER SAME LENGTH FOR ALL PILES (i.e. WITHOUT A LONGER TEST PILE). TEST PILES, AS NOTED, WILL BE DRIVEN FIRST TO ESTABLISH DRIVING CRITERIA FOR THE OTHER PILES IN EACH SUBSTRUCTURE ELEMENT. AN ADDITIONAL __' HAS BEEN ADDED TO THE DESIGN LENGTH OF EACH PILE AS A CONTINGENCY.

CAST-IN-PLACE PILE NOTES

1. *PROTECT ALL REINFORCING STEEL WITH FUSION BONDED EPOXY.*
2. *APPLY PROTECTIVE COATING TO ALL PILES IN ACCORDANCE WITH SECTION 1032.3.2 OF STANDARD SPECIFICATIONS.*

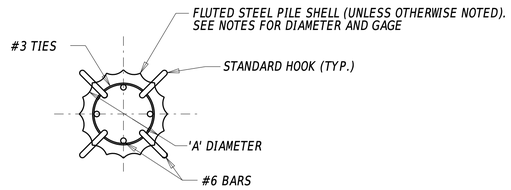

TYPICAL PILE REINFORCEMENT PLAN

CAST-IN-PLACE PILE SIZES	
PILE SIZE 'A'	DOWELS AND HOOKS 'B'
12"	3 EA.
14"	4 EA.
16"	4 EA.
18"	4 EA.

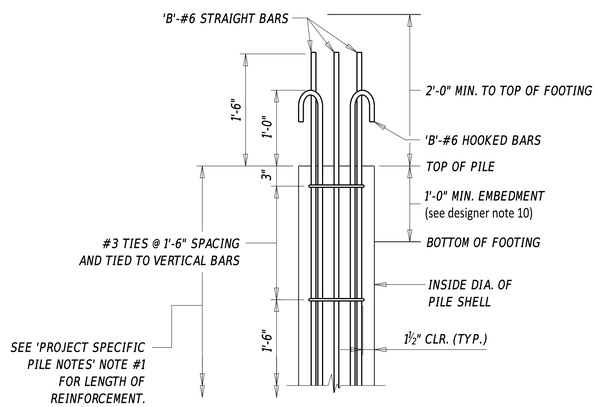

TYPICAL PILE REINFORCEMENT ELEVATION

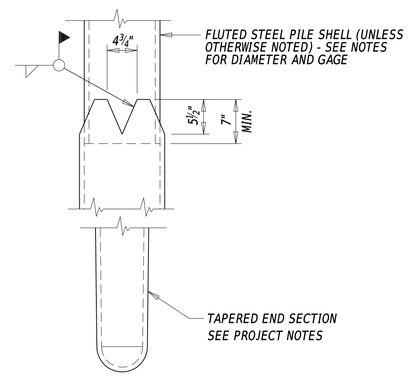

NOTE: THIS SPLICE DETAIL SHALL ALSO BE USED FOR FIELD SPLICES OF BUILD-UP SECTIONS.

TYPICAL PILE SPLICE

CAST-IN-PLACE PILE DETAILS

PILE INSTALLATION DATA					
SUBSTRUCTURE UNIT	DESIGN DATA		ACTUAL FIELD DATA		
	MINIMUM TIP ELEVATION	ESTIMATED PILE TIP ELEVATION	ACTUAL MINIMUM TIP ELEVATION	ACTUAL AVERAGE TIP ELEVATION	ACTUAL MAXIMUM TIP ELEVATION

SPECIAL NOTICE - DESIGNER NOTE

1. FLUTED CAST-IN-PLACE PILES HAVE BEEN UNAVAILABLE SINCE 2018. DO NOT SPECIFY THIS PARTICULAR PILE OPTION ON ANY NEW CONSTRUCTION. THESE DETAILS ARE RETAINED HERE FOR REFERENCE USE ON EXISTING BRIDGES.

DESIGNER NOTES

1. 'PROJECT SPECIFIC PILE NOTES', 'GENERAL PILE NOTES', AND 'CAST-IN-PLACE PILE NOTES' ARE REQUIRED TO BE SHOWN ON THE PLAN SETS.

2. UNDER 'PROJECT SPECIFIC PILE NOTES', NOTE 1, THE DESIGNER MUST DETERMINE THE APPROPRIATE GAGE THICKNESS FOR THE PILE BASED ON ANTICIPATED DRIVING STRESSES. IF THE ULTIMATE BEARING CAPACITY IS LESS THAN 400 KIPS, 7 GAGE IS USUALLY APPROPRIATE. IF THE ULTIMATE BEARING CAPACITY IS EXPECTED TO EXCEED 400 KIPS, A MINIMUM GAGE THICKNESS OF 5 SHOULD BE USED. THE MINIMUM GAGE THICKNESS OF 7 MUST BE USED IN ALL CASES. HOWEVER, IN SOME CASES DUE TO DRIVABILITY REASONS OR IN EXTREMELY CORROSIVE CONDITIONS, USE OF 3 GAGE MAY BE REQUIRED.

3. UNDER 'PROJECT SPECIFIC PILE NOTES', NOTE 1, THE DESIGNER MUST DETERMINE THE POINT OF FIXITY OF THE PILE AS PER A10.7.3.13.4 AND SECTION 107.5.4. IF THE DISTANCE FROM TOP OF THE PILE TO THE POINT OF FIXITY + 3'-0" IS LESS THAN 20'-0" (OR STRAIGHT PORTION OF THE PILE IF LESS THAN 20'-0"), THEN A MINIMUM OF 20'-0" (OR STRAIGHT PORTION OF THE PILE IF LESS THAN 20'-0") WILL BE REQUIRED. IF THE POINT OF FIXITY + 3'-0" IS GREATER THAN 20'-0", THEN NOTE 1 MUST BE REVISED ACCORDINGLY TO REFLECT THE ADDITIONAL LENGTH FOR REINFORCEMENT REQUIRED TO BE EXTENDED INTO THE PILE.

4. UNDER 'PROJECT SPECIFIC PILE NOTES', NOTE 2, THE ESTIMATED PRODUCTION PILE LENGTH SHOULD BE EQUAL TO THE ESTIMATED DESIGN PILE LENGTH IF 'GENERAL PILE NOTES', NOTE 2(A) IS USED. IF 'GENERAL PILE NOTES', NOTE 2(B) IS USED, THEN THE ESTIMATED PRODUCTION PILE LENGTH SHOULD BE EQUAL TO DESIGN PILE LENGTH + 5'-0".

5. UNDER 'PROJECT SPECIFIC PILE NOTES', NOTE 3, THE REQUIRED TEST PILE LENGTH SHOULD BE 10'-0" LONGER THAN THE ESTIMATED PRODUCTION PILE LENGTH IF 'GENERAL PILE NOTES', NOTE 2(A) IS USED. IF 'GENERAL PILE NOTES', NOTE 2(B) IS USED, THEN THE REQUIRED TEST PILE LENGTH SHOULD BE EQUAL TO THE ESTIMATED PRODUCTION PILE LENGTH + 5'-0".

6. UNDER 'GENERAL PILE NOTES', NOTE 2, THE DESIGNER MUST CHOOSE BETWEEN 2(A) AND 2(B) (AND DELETE THE NOTE CONTAINING THE METHOD NOT USED FOR THE PROJECT). METHOD 2(A) SHOULD BE USED IF THERE IS SUFFICIENT TIME FOR THE CONTRACTOR TO ORDER PRODUCTION PILES BASED ON TEST PILE RESULTS. THIS TYPICALLY APPLIES ONLY TO LARGER-SIZED PROJECTS OR WHEN PILE DRIVING IS NOT THE CRITICAL PATH. METHOD 2(B) IS MORE COMMON DUE TO TIME CONSTRAINTS IN THE CONSTRUCTION SCHEDULE AND THEREFORE IS USED FOR MAJORITY OF DELDOT PROJECTS.

7. UNDER 'CAST-IN-PLACE PILE NOTES', NOTE 2, THE DESIGNER MAY CONSIDER WAIVING REQUIREMENTS OF APPLYING COATING TO THE PILE IF EVIDENCE SUPPORTS THAT THE SOIL IS NON-CORROSIVE AND IS NOT LOCATED IN MARINE ENVIRONMENT. IF NO COATING IS REQUIRED, THIS NOTE MAY BE DELETED.

8. THE 'PILE INSTALLATION DATA' TABLE SHOULD BE USED FOR ALL PROJECTS. IF MINIMUM TIP ELEVATION IS NOT REQUIRED FOR THE PROJECT, THE DESIGNER SHOULD SIMPLY PLACE 'N/A' UNDER THE 'MINIMUM TIP ELEVATION' COLUMN. THE 'ACTUAL FIELD DATA' INFORMATION SHOULD BE FILLED OUT BY THE FIELD INSPECTOR AND INCLUDED IN THE AS-BUILT DRAWINGS.

9. THE DESIGNER MUST EVALUATE THE STRUCTURAL CAPACITY OF THE PILE FOR ANTICIPATED DRIVING CONDITIONS AND WHEN STRENGTH I LOADS ARE APPLIED TO THE PILES AS PART OF PILE SIZING SELECTION.

10. THE DESIGNER MUST DETERMINE WHETHER THE PILE BE CLASSIFIED AS 'FREE HEAD' OR 'FIXED HEAD'.

    (a) STANDARD DELDOT PRACTICE REQUIRES THE TOP OF PILE TO PROJECT A MINIMUM OF 12" INTO THE PILE CAP AFTER ALL DAMAGED MATERIAL HAS BEEN REMOVED WHILE MEETING REQUIRED QUANTITY OF DOWELS AND HOOKS 'B' IN THE TABLE PROVIDED ON THIS SHEET. PILES MEETING THESE MINIMUM REQUIREMENTS WILL BE CONSIDERED AS 'FREE HEAD'.

    (b) FOR A PILE TO BE CLASSIFIED AS 'FIXED HEAD', THE PILE MUST MEET ALL THE REQUIREMENTS AS SPECIFIED IN 10(a) WITH EXCEPTION THAT TOP OF PILE MUST PROJECT INTO THE PILE CAP A MINIMUM OF 2*PILE DIA. AFTER ALL DAMAGED MATERIAL HAVE BEEN REMOVED.

11. REFER TO SECTION 107.3.4.3 FOR MORE INFORMATION ON CAST-IN-PLACE PILES.

12. FOR PILE BENTS, THE DESIGNER MUST DETERMINE THE POINT OF FIXITY AS PER A10.7.3.13 AND SECTION 107.5.4. FURTHERMORE, THE DESIGNER MUST CONSIDER THE SLENDERNESS RATIO WHEN SELECTING THE PILE SIZE FOR BOTH PRODUCTION AND TEST PILES.

13. SINCE FLUTED STEEL PILES ARE PROPRIETARY, THE DESIGNER MUST INCLUDE ALTERNATIVE PILE TYPE ON THE PLANS OR THE CONTRACT DOCUMENT.

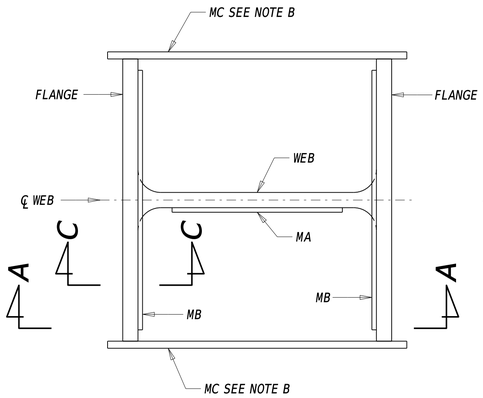

PLAN

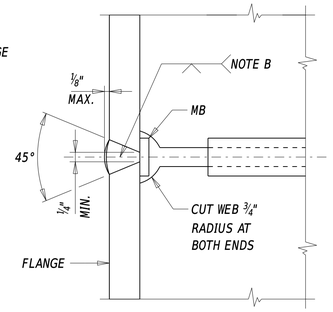

SECTION C-C
ALTERNATE FLANGE WELD

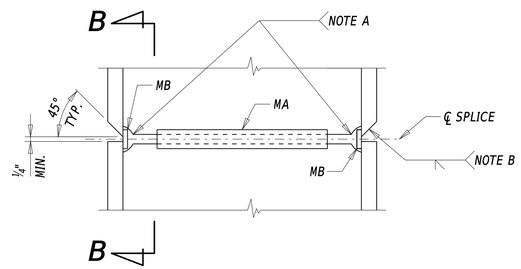

SECTION A-A

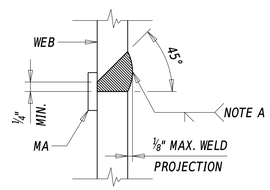

SECTION B-B

SPLICE MATERIAL REQUIREMENTS		
HP 10"	HP 12"	HP 14"
1 BAR MA 1" x ¼" x 7¼"	1 BAR MA 1" x ¼" x 9⅜"	1 BAR MA 1" x ¼" x 1'-0"
2 BARS MB 1" x ¼" x 10"	2 BARS MB 1" x ¼" x 1'-0"	2 BARS MB 1" x ¼" x 1'-2½"
2 BARS MC 3" x ⅜" x 11"	2 BARS MC 3" x ⅜" x 1'-1"	2 BARS MC 3" x ⅜" x 1'-3"

NOTE A: MAKE END OF WELD SMOOTH AND FLUSH WITH WEB CUT, ¼" MIN. EFFECTIVE THROAT.
NOTE B: TACK WELD BAR MC TO FLANGE AT SPLICE TO BACK UP END OF FLANGE WELD, REMOVE MC AFTER WELD IS COMPLETED. END OF WELD MUST BE SMOOTH AND FLUSH WITH EDGE OF FLANGE. GRIND WELD SMOOTH WITH EDGE OF FLANGE IF PILE IS UNSUPPORTED IN WELD AREA SUCH AS: IN AIR, WATER, OR SOFT MUD, ¼" MIN. EFFECTIVE THROAT.
NOTE C: LET WELDS COOL TO AIR TEMPERATURE BEFORE RESUMING THE PILE DRIVING.
NOTE D: NO PILE SPLICING IS ALLOWED ON ANY PORTION OF PILE THAT IS TO REMAIN EXPOSED OR TO BE ABOVE FINISHED GROUNDLINE IN COMPLETED STRUCTURE.
NOTE E: ALL SPLICE MATERIALS MUST BE ASTM A709, GRADE 50.
NOTE F: THE 0.25-INCH THICKNESS FOR MA AND MB BARS SPECIFIED IN THE 'SPLICE MATERIAL REQUIREMENTS' TABLE MAY BE REDUCED TO MINIMUM OF 0.203-INCH THICK.

STEEL H-PILE SPLICE DETAILS

PILE INSTALLATION DATA					
SUBSTRUCTURE UNIT	DESIGN DATA		ACTUAL FIELD DATA		
	MINIMUM TIP ELEVATION	ESTIMATED PILE TIP ELEVATION	ACTUAL MINIMUM TIP ELEVATION	ACTUAL AVERAGE TIP ELEVATION	ACTUAL MAXIMUM TIP ELEVATION

See Designer Note 7

TYPICAL H-PILE SIZES	
SECTION	WEIGHT (LB/FT)
HP 8"	36
HP 10"	42
	57
HP 12"	53
	63
	74
	84
	89
	102
	117
HP 14"	73
	89
	102
	117
HP 16"	88
	101
	121
	141
	162
	183
HP 18"	135
	157
	181
	204

PROJECT SPECIFIC PILE NOTES

1. PILE TYPE:
   THIS PROJECT WILL UTILIZE HP__X___ PILES CONFORMING TO ASTM A709, GRADE 50.
2. ESTIMATED PRODUCTION PILE LENGTH IS ___'. (See Designer Note 2)
3. REQUIRED TEST PILE LENGTH IS __' LONGER THAN THE ESTIMATED PRODUCTION PILE LENGTH. (See Designer Note 3)
4. DRIVE PILES TO A BEARING RESISTANCE OF ___ KIPS USING A RESISTANCE FACTOR OF ____.
5. MINIMUM TIP ELEVATION WILL NOT BE REQUIRED FOR THIS PROJECT or REFER TO THE PILE INSTALLATION DATA TABLE FOR MINIMUM TIP ELEVATION.
6. if using accelerated bridge construction, see Designer Note 12.

GENERAL PILE NOTES

1. FOR MORE INFORMATION REGARDING PILE DRIVING, INSTALLATION, MATERIALS, AND FABRICATION, REFER TO SECTION 605 - DRIVEN PILES OF THE STANDARD SPECIFICATIONS.
2. See Designer Note 4
   (A) DRIVE TEST PILES AT EACH LOCATION SHOWN ON THE PLANS. PRODUCTION PILES WILL BE ORDERED BASED ON THE RESULTS OF THE TEST PILE DRIVING.
   or
   (B) ORDER SAME LENGTH FOR ALL PILES (i.e. WITHOUT A LONGER TEST PILE). TEST PILES, AS NOTED, WILL BE DRIVEN FIRST TO ESTABLISH DRIVING CRITERIA FOR THE OTHER PILES IN EACH SUBSTRUCTURE ELEMENT. AN ADDITIONAL __' HAS BEEN ADDED TO THE DESIGN LENGTH OF EACH PILE AS A CONTINGENCY.

STEEL H-PILE NOTES

1. STEEL H-PILE SPLICE DETAILS APPLIES ONLY TO HP 10", HP 12", AND HP 14" PILES.
2. THE CONTRACTOR MAY CONSIDER USING ALTERNATIVE STEEL H-PILE SPLICE DETAILS. SUBMIT ALTERNATIVE DETAILS FOR STEEL H-PILE SPLICING TO THE DEPARTMENT FOR APPROVAL. (See Designer Note 5)
3. USE A HEAVY-DUTY TIP REINFORCEMENT FOR ALL PILES. THE TYPE OF TIP REINFORCEMENT MUST BE APPROVED BY THE DEPARTMENT. PAYMENT INCIDENTAL TO THE RESPECTIVE PILE ITEM. (See Designer Note 6)

DESIGNER NOTES

1. 'PROJECT SPECIFIC PILE NOTES', 'GENERAL PILE NOTES', AND 'STEEL H-PILE NOTES' ARE REQUIRED TO BE SHOWN ON THE PLAN SETS.

2. UNDER 'PROJECT SPECIFIC PILE NOTES', NOTE 2, THE ESTIMATED PRODUCTION PILE LENGTH SHOULD BE EQUAL TO THE ESTIMATED DESIGN PILE LENGTH IF 'GENERAL PILE NOTES', NOTE 2(A) IS USED. IF 'GENERAL PILE NOTES', NOTE 2(B) IS USED, THEN THE ESTIMATED PRODUCTION PILE LENGTH SHOULD BE EQUAL TO THE ESTIMATED DESIGN PILE LENGTH + 5'-0".

3. UNDER 'PROJECT SPECIFIC PILE NOTES', NOTE 3, THE REQUIRED TEST PILE LENGTH SHOULD BE 10'-0" LONGER THAN THE ESTIMATED PRODUCTION PILE LENGTH IF 'GENERAL PILE NOTES', NOTE 2(A) IS USED. IF 'GENERAL PILE NOTES', NOTE 2(B) IS USED, THEN THE REQUIRED TEST PILE LENGTH SHOULD BE EQUAL TO PRODUCTION PILE LENGTH + 5'-0".

4. UNDER 'GENERAL PILE NOTES', NOTE 2, THE DESIGNER MUST CHOOSE BETWEEN 2(A) AND 2(B) (AND DELETE THE NOTE CONTAINING THE METHOD NOT USED FOR THE PROJECT). METHOD 2(A) SHOULD BE USED IF THERE IS SUFFICIENT TIME FOR THE CONTRACTOR TO ORDER PRODUCTION PILES BASED ON TEST PILE RESULTS. THIS TYPICALLY APPLIES ONLY TO LARGER-SIZED PROJECTS OR WHEN PILE DRIVING IS NOT THE CRITICAL PATH. METHOD 2(B) IS MORE COMMON DUE TO TIME CONSTRAINTS IN THE CONSTRUCTION SCHEDULE AND THEREFORE IS USED FOR MAJORITY OF DELDOT PROJECTS.

5. UNDER 'STEEL H-PILE NOTES', NOTE 2, AND THE STEEL H-PILE SPLICE DETAILS; IT SHOULD BE CLEAR THAT WHILE SUCH DETAILS ARE RECOMMENDED AND 'PRE-APPROVED', THE CONTRACTOR SHOULD BE ENCOURAGED TO USE OTHER ALTERNATIVE SPLICE DETAILS THAT REDUCES CONSTRUCTION TIME AND/OR THE TOTAL CONSTRUCTION COSTS.

6. UNDER 'STEEL H-PILE NOTES', NOTE 3, THIS NOTE IS ONLY NECESSARY IF THE PILE TIP IS EXPECTED TO COME IN CONTACT WITH BOULDERS AND/OR WILL BE DRIVEN INTO THE BEDROCK. OTHERWISE, DELETE THE NOTE.

7. THE 'PILE INSTALLATION DATA' TABLE SHOULD BE USED FOR ALL PROJECTS. IF MINIMUM TIP ELEVATION IS NOT REQUIRED FOR THE PROJECT, THE DESIGNER SHOULD SIMPLY PLACE 'N/A' UNDER THE 'MINIMUM TIP ELEVATION' COLUMN. THE 'ACTUAL FIELD DATA' INFORMATION SHOULD BE FILLED OUT BY THE FIELD INSPECTOR AND INCLUDED IN THE AS-BUILT DRAWINGS.

8. THE DESIGNER MUST EVALUATE THE STRUCTURAL CAPACITY OF THE PILE FOR ANTICIPATED DRIVING CONDITIONS AND WHEN STRENGTH I LOADS ARE APPLIED TO THE PILES AS PART OF PILE SIZING SELECTION.

9. THE DESIGNER MUST DETERMINE WHETHER THE PILE BE CLASSIFIED AS 'FREE HEAD' OR 'FIXED HEAD'.

   (a)STANDARD DELDOT PRACTICE REQUIRES THE TOP OF PILE TO PROJECT A MINIMUM OF 12" INTO THE PILE CAP AFTER ALL DAMAGED MATERIAL HAS BEEN REMOVED. PILES MEETING THESE MINIMUM REQUIREMENTS WILL BE CONSIDERED AS 'FREE HEAD'.

   (b)FOR A PILE TO BE CLASSIFIED AS 'FIXED HEAD', THE PILE MUST MEET ALL THE REQUIREMENTS AS SPECIFIED IN 10(a) WITH EXCEPTION THAT TOP OF PILE MUST PROJECT INTO THE PILE CAP A MINIMUM OF 2*PILE DIA. AFTER ALL DAMAGED MATERIAL HAVE BEEN REMOVED.

10. FOR PILE BENTS, THE DESIGNER MUST DETERMINE THE POINT OF FIXITY AS PER A10.7.3.13 AND SECTION 107.5.4. FURTHERMORE, THE DESIGNER MUST CONSIDER THE SLENDERNESS RATIO WHEN SELECTING THE PILE SIZE FOR BOTH PRODUCTION AND TEST PILES.

11. REFER TO SECTION 107.3.4.4 FOR MORE INFORMATION ON STEEL H-PILES.

12. FOR CERTAIN TYPES OF CONSTRUCTION SUCH AS ACCELERATED BRIDGE CONSTRUCTION WITH PRECAST CONCRETE SUBSTRUCTURES, CONSIDER ADDING A NEW NOTE UNDER 'PROJECT SPECIFIC PILE NOTES' ASSIGNING A VALUE OF LESS THAN 3 INCHES SPECIFIED IN SECTION 605.3.4.B.9 OF STANDARD SPECIFICATIONS FOR MAXIMUM ALLOWABLE VARIATION AT THE TOP OF THE PILE IN ANY DIRECTION FROM THE LOCATION SHOWN IN THE CONTRACT DOCUMENTS.

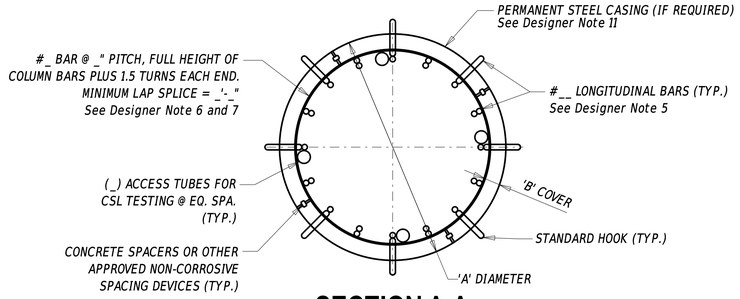

SECTION A-A

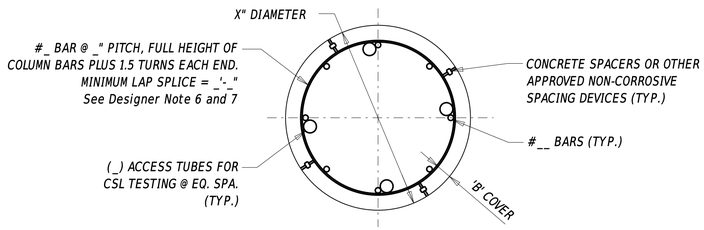

SECTION B-B

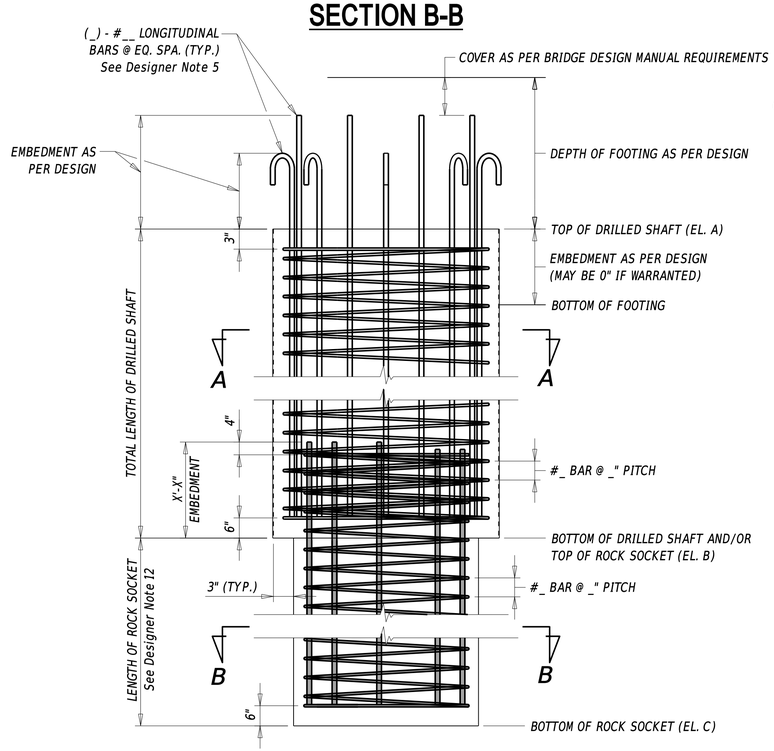

ELEVATION

NOTE: POTENTIAL BUNDLED BARS, ACCESS TUBES, AND SPACERS NOT SHOWN FOR CLARITY. ROCK SOCKET REINFORCEMENT SHADED FOR CLARITY.

DRILLED SHAFT DETAILS FOR BRIDGE STRUCTURES

DRILLED SHAFT SIZES

DRILLED SHAFT SIZE 'A'	MINIMUM CONCRETE COVER 'B'
30"	3"
36"	3"
42"	4"
48"	4"
54"	4"
60"	6"
66"	6"
72"	6"

NOTE:
- THE MINIMUM CONCRETE COVER 'B' ARE FOR LONGITUDINAL BARS. THE MINIMUM CONCRETE COVER FOR TRANSVERSE BARS MAY BE LESS THAN REQUIRED FOR LONGITUDINAL BARS BY NO MORE THAN 0.5".
- LONGITUDINAL BARS MAY BE BUNDLED (IN MAXIMUM OF TWO'S).
- IF HOOKED LONGITUDINAL BARS ARE BUNDLED, THE SECOND LONGITUDINAL BAR MUST BE STRAIGHT.
- BUNDLE LONGITUDINAL BARS IN THE RADIAL DIRECTION.
- BUNDLE TRANSVERSE BARS VERTICALLY.
- THE DEPARTMENT PREFERS THAT HOOKED LONGITUDINAL BARS ARE USED AT APPROXIMATELY 50% OF LOCATIONS. HOWEVER IF JUSTIFIED BY DESIGN, HOOKED LONGITUDINAL BARS MAY BE SUBSTITUTED FOR STRAIGHT OR 90° BEND BARS.
- THE NUMBER OF LOCATIONS OF LONGITUDINAL BARS MUST MEET THE REQUIREMENTS OF A5.12.9.5.2.
- Also see Designer Notes 3-6.

DRILLED SHAFT INSTALLATION DATA

SHAFT NO. or SUBSTRUCTURE UNIT	DESIGN DATA			ACTUAL FIELD DATA	
	EL. A	ESTIMATED EL. B	ESTIMATED EL. C	ACTUAL EL. B	ACTUAL EL. C

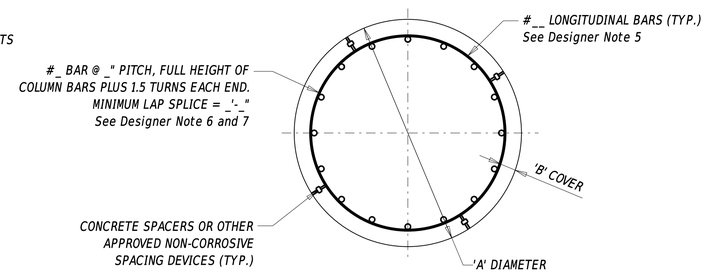

SECTION C-C

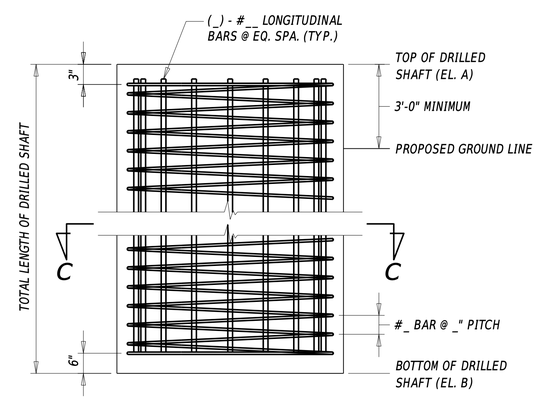

ELEVATION

NOTE: POTENTIAL BUNDLED BARS AND SPACERS NOT SHOWN FOR CLARITY.

DRILLED SHAFT DETAILS FOR SIGN STRUCTURES

PROJECT SPECIFIC DRILLED SHAFT NOTES

1. *THIS PROJECT WILL UTILIZE __" DIA. DRILLED SHAFTS.*
2. *THE LONGITUDINAL BARS WILL BE #__ BARS AND WILL or WILL NOT BE BUNDLED. THE TRANSVERSE BARS WILL BE #_ BARS SPIRALED SPACED AT __" PITCH AND WILL or WILL NOT BE BUNDLED. See Designer Note 3.*
3. *THE MINIMUM CONCRETE COVER IS _".*
4. *THE ESTIMATED LENGTH FOR DRILLED SHAFT IN SOIL IS ___'.*
5. *DRILLED SHAFTS WILL REQUIRE _" THICK PERMANENT CASING.*
6. *ROCK SOCKETS WITH LENGTH OF __' WILL BE REQUIRED. REFER TO SECTION 606.3.7 OF STANDARD SPECIFICATIONS.*
7. *INSTALL A TOTAL OF _ TECHNIQUE SHAFT(s) IN ACCORDANCE WITH SECTION 606.3.12. OF STANDARD SPECIFICATIONS.*
8. *LOAD TEST A TOTAL OF _ TECHNIQUE SHAFT(s) or DRILLED SHAFT(s) IN ACCORDANCE WITH SECTION 606.3.13 OF STANDARD SPECIFICATIONS.*
9. *PERFORM EXPLORATORY DRILLING IN ACCORDANCE WITH SECTION 606.3.14. OF STANDARD SPECIFICATIONS.*
10. *DRILLED SHAFTS ARE ESTIMATED TO HAVE A BEARING RESISTANCE OF ___ KIPS USING A RESISTANCE FACTOR OF ____.*

GENERAL DRILLED SHAFT NOTES

1. *FOR MORE INFORMATION REGARDING PLACEMENT, MATERIALS, AND FABRICATON OF DRILLED SHAFTS, REFER TO SECTION 606 - DRILLED SHAFTS OF THE STANDARD SPECIFICATIONS.*
2. *VERIFY ALL ELEVATIONS IN THE FIELD PRIOR TO FABRICATION AND CONSTRUCTION.*
3. *EPOXY COAT ALL REINFORCEMENT IN THE DRILLED SHAFT.*
4. *INSTALL CONCRETE SPACERS OR OTHER APPROVED NON-CORROSIVE SPACING DEVICES IN ACCORDANCE WITH SECTION 606.3.8 OF THE STANDARD SPECIFICATIONS.*
5. *INSTALL ACCESS TUBES FOR CROSSHOLE SONIC LOG (CSL) TESTING IN ACCORDANCE WITH SECTION 606.3.11 OF THE STANDARD SPECIFICATIONS.*

DESIGNER NOTES

1. 'PROJECT SPECIFIC DRILLED SHAFT NOTES' AND 'GENERAL DRILLED SHAFT NOTES' ARE REQUIRED TO BE SHOWN ON THE PLAN SETS. NOTES LISTED THAT ARE NOT REQUIRED FOR THE PROJECT SHOULD BE DELETED.

2. NOTES UNDER 'PROJECT SPECIFIC DRILLED SHAFT NOTES' ARE GENERAL. ADDITIONAL PROJECT SPECIFIC NOTES UNIQUE TO THE PROJECT SHOULD BE ADDED AS THE CONDITIONS DICTATE.

3. UNDER 'PROJECT SPECIFIC DRILLED SHAFT NOTES', NOTE 2, WHILE BOTH LONGITUDINAL AND TRANSVERSE REINFORCEMENT ARE REQUIRED FOR THE FULL DEPTH OF THE DRILLED SHAFT IN ORDER TO MAINTAIN STABILITY OF THE REBAR CAGE DURING TRANSPORTATION AND PLACEMENT, THE DESIGNER MAY SPECIFY AN ACCEPTABLE REDUCTION IN REINFORCEMENT BEYOND THE DEPTH OF AT LEAST 3*DIAMETERS BELOW THE DEPTH OF MOMENT FIXITY. THE POINT OF MOMENT FIXITY MAY BE OBTAINED VIA THE P-Y METHOD.

4. IN THE 'DRILLED SHAFT SIZES' TABLE, THE MINIMUM CONCRETE COVER SPECIFIED ARE FOR UNCASED SHAFTS. IF THE SHAFT IS CASED, THE DESIGNER HAS THE OPTION TO USE REDUCED MINIMUM CONCRETE COVER AS SPECIFIED IN TABLE 205.10.1-1.

5. MINIMUM SIZE OF LONGITUDINAL BARS IS #5 IN ACCORDANCE WITH A5.6.4.2. THE RECOMMENDED AREA OF REINFORCEMENT ABOVE THE MOMENT FIXITY SHOULD BE BETWEEN 1% TO 2% OF THE CROSS-SECTION OF THE DRILLED SHAFT. THE REDUCED AREA AS DESCRIBED IN DESIGNER NOTE #3 MAY BE BELOW 1%, BUT STILL MUST MEET MINIMUM REINFORCEMENT REQUIREMENTS IN A5.6.4.2.

6. MINIMUM SIZE OF TRANSVERSE (SPIRAL) BARS IS #3. THE MAXIMUM PITCH OF THE SPIRAL REINFORCEMENT MUST BE 6" DOWN TO THE DEPTH OF AT LEAST 3*DIAMETERS PLUS 12" BELOW THE DEPTH OF MOMENT FIXITY. BUT IN ALL CASES, THE MINIMUM REINFORCEMENT REQUIREMENTS IN A5.6.4.6 MUST BE MET.

7. ALTERNATIVELY, THE DESIGNER MAY CONSIDER USE OF HOOPS IN LIEU OF SPIRAL REINFORCEMENT FOR SIGN STRUCTURE FOUNDATION.

8. THE ANCHOR BOLT AND ANCHOR PLATE DETAILS ARE OMITTED FROM THIS SHEET AT THE 'DRILLED SHAFT FOR SIGN STRUCTURES' ELEVATION VIEW. THESE DETAILS CAN BE FOUND IN SECTION 365.01 - SIGN STRUCTURES.

9. THE DRILLED SHAFT INSTALLATION DATA' TABLE SHOULD BE USED FOR ALL PROJECTS. THE 'ACTUAL FIELD DATA' INFORMATION SHOULD BE FILLED OUT BY THE FIELD INSPECTOR AND INCLUDED IN THE AS-BUILT DRAWINGS.

10. THE DESIGNER MUST EVALUATE THE STRUCTURAL CAPACITY OF THE DRILLED SHAFT FOR THE CONTROLLING LOADS AS PART OF DRILLED SHAFT SIZING SELECTION.

11. IF PERMANENT CASING IS USED, AND IS GREATER THAN ⅛" THICK, IT MAY BE CONSIDERED AS PART OF THE REINFORCEMENT AND AS BEING STRUCTURALLY EFFECTIVE TO RESIST AXIAL LOADS AND BENDING MOMENTS IN ACCORDANCE WITH A5.12.9.5.2. HOWEVER, A MINIMUM OF 1/16" MUST BE DEDUCTED FROM THE CASING THICKNESS IN CORROSIVE ENVIRONMENTS, BUT THE DESIGNER SHOULD ALSO GIVE FURTHER CONSIDERATION ON INCREASING THE REDUCTION FOR CASINGS THAT ARE DIRECTLY EXPOSED TO SALT WATER, PARTICULARLY IN SPLASH ZONES.

12. THE DESIGNER MUST EVALUATE THE NEED FOR ROCK SOCKETS IN ALL CASES WHERE THE DRILLED SHAFTS COME INTO CONTACT WITH THE ROCK BED.

13. FOR PILE BENTS, THE DESIGNER MUST DETERMINE THE POINT OF FIXITY IN ACCORDANCE WITH A10.8.3.9 AND SECTION 107.5.4. FURTHERMORE, THE DESIGNER MUST CONSIDER THE SLENDERNESS RATIO WHEN SELECTING THE DRILLED SHAFT SIZE.

14. REFER TO SECTION 107.3.4.6 AND PUBLICATION NO. FHWA-NHI-10-016 (FHWA GEC 010) - 'DRILLED SHAFTS: CONSTRUCTION PROCEDURES AND LRFD DESIGN METHODS' FOR MORE INFORMATION ON DRILLED SHAFTS.

15. FOR CERTAIN TYPES OF CONSTRUCTION SUCH AS ACCELERATED BRIDGE CONSTRUCTION WITH PRECAST CONCRETE SUBSTRUCTURES, CONSIDER ADDING A NEW NOTE UNDER 'PROJECT SPECIFIC NOTES' ASSIGNING A VALUE OF LESS THAN 3 INCHES SPECIFIED IN SECTION 605.3.4.B.9 OF STANDARD SPECIFICATIONS FOR MAXIMUM ALLOWABLE VARIATION AT THE TOP OF THE PILE IN ANY DIRECTION FROM THE LOCATION SHOWN IN THE CONTRACT DOCUMENTS.

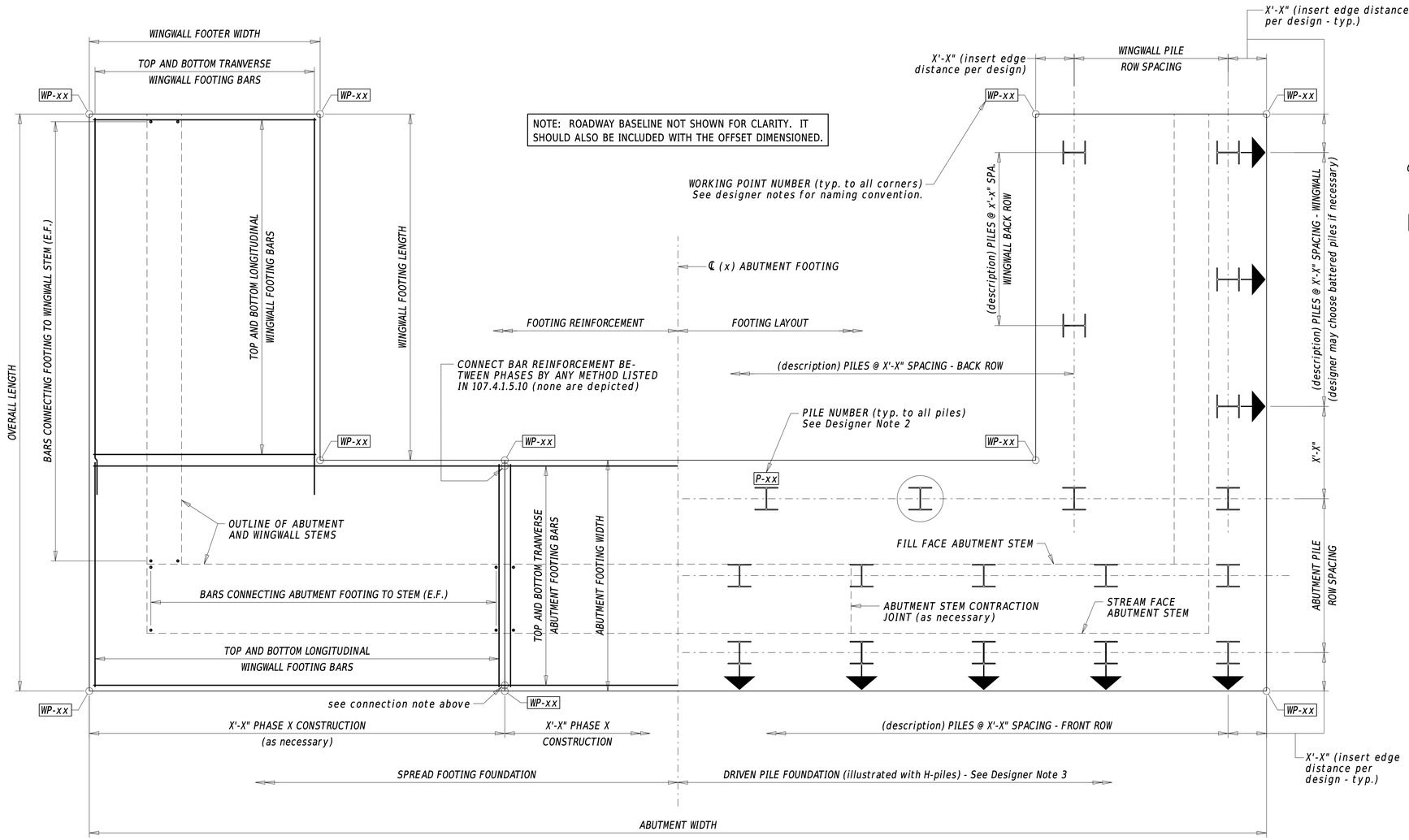

ABUTMENT (name) FOOTING PLAN

See Designer Note 7

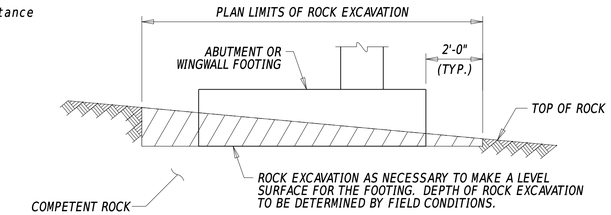

ROCK EXCAVATION

NOTE: WHERE ROCK EXCAVATION EXCEEDS 2'-0" DEPTH, CONSIDER A STEP IN THE FOOTING.

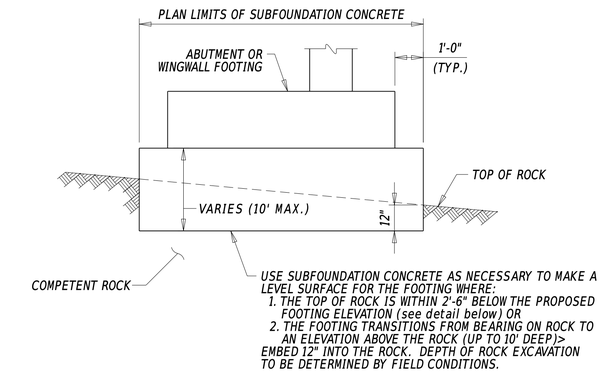

SUBFOUNDATION CONCRETE

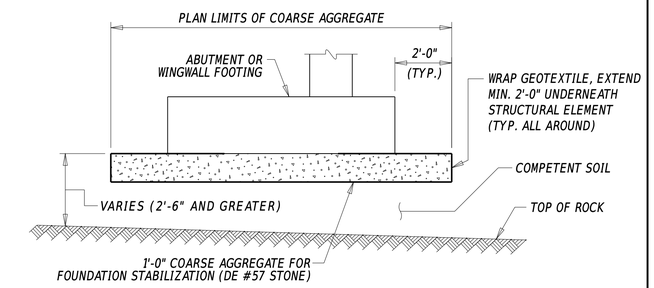

FOUNDATION STABILIZATION (where entire footing is above rock)

NOTE: WHERE THERE IS UNSUITABLE SOIL BETWEEN THE FOOTING AND ROCK, USE SUBFOUNDATION CONCRETE UP TO 10' DEPTH.

SHALLOW FOUNDATION DETAILS

SEE DESIGNER NOTE #2 FOR PILE COORDINATE AND WORKING POINT NAMING CONVENTION

ABUTMENT PILE COORDINATES					ABUTMENT PILE COORDINATES				
POINT	STATION	OFFSET	NORTHING	EASTING	POINT	STATION	OFFSET	NORTHING	EASTING
P01	xx+xx.xx	(-)xx.xx	xxxxxx.xx	xxxxxx.xx					

LEGEND

- PLUMB PILE (H-PILE depicted)
- TEST PILE
- BATTER PILE

SEE DESIGNER NOTE #2 FOR PILE COORDINATE AND WORKING POINT NAMING CONVENTION

ABUTMENT WORKING POINTS					ABUTMENT WORKING POINTS				
POINT	STATION	OFFSET	NORTHING	EASTING	POINT	STATION	OFFSET	NORTHING	EASTING
WP01	xx+xx.xx	(-)xx.xx	xxxxxx.xx	xxxxxx.xx					

NOTE: ROADWAY BASELINE NOT SHOWN FOR CLARITY. IT SHOULD ALSO BE INCLUDED WITH THE OFFSET DIMENSIONED.

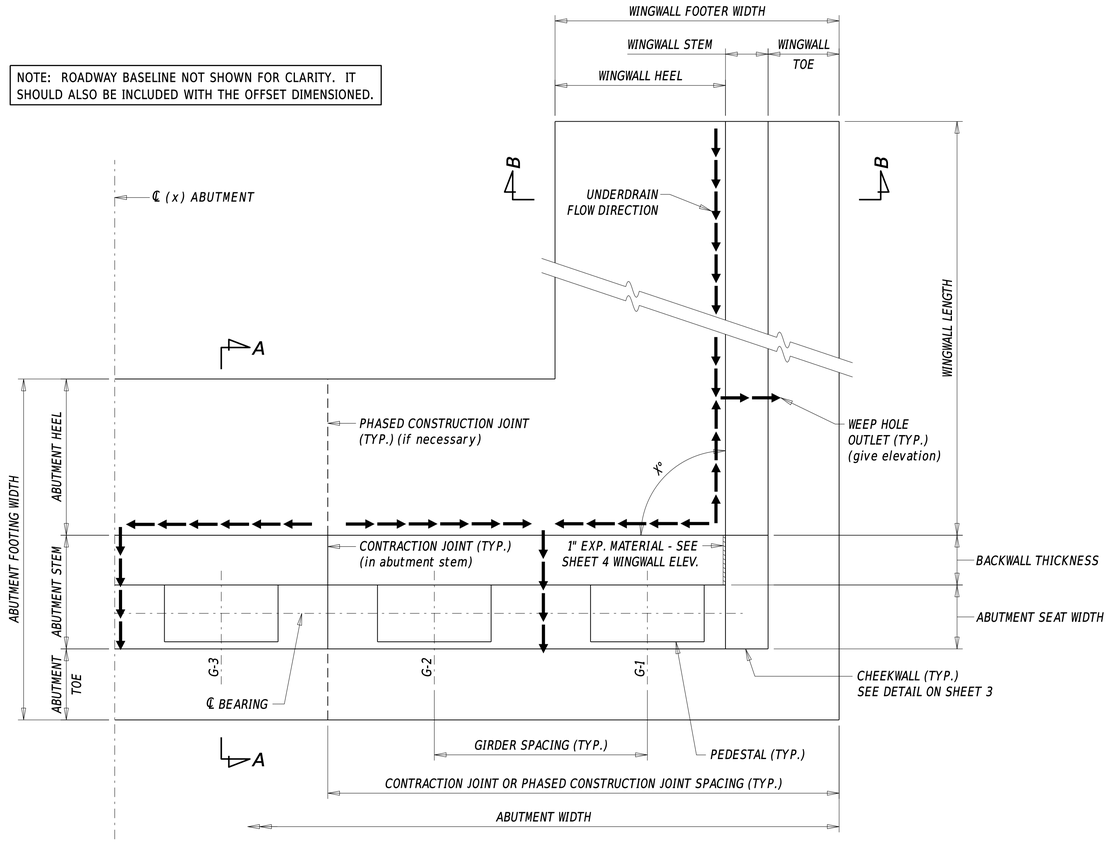

ABUTMENT HALF PLAN

NOTE: THIS EXAMPLE DEPICTS ABUTMENT TYPE IIIB AS DESCRIBED IN BDM 103.6.2 AND AS SHOWN ON DETAIL 325.03.

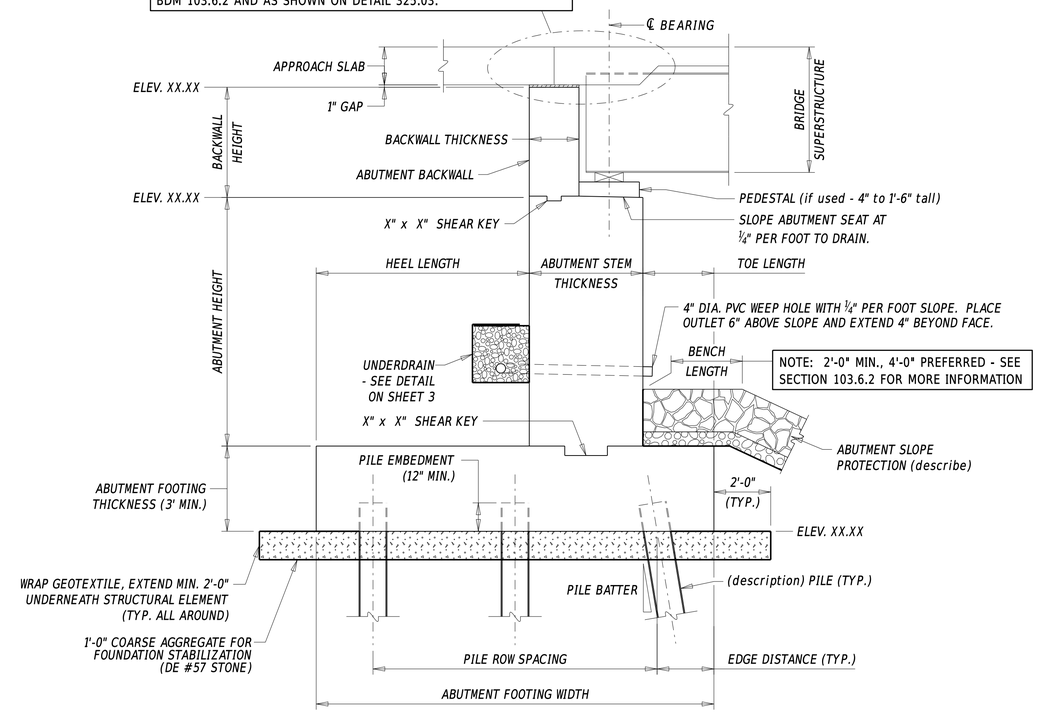

ABUTMENT SECTION (A-A)

NOTE: THIS EXAMPLE DEPICTS ABUTMENT TYPE IIC WITH A CONVENTIONAL ABUTMENT AS DESCRIBED IN BDM 103.6.2 AND AS SHOWN ON DETAIL 325.01 SHEET 3 'END DIAPHRAGM SECTION' AND DETAIL 325.03 SHEET 1 SECTION A-A.

NOTE: A HALF PLAN IS USED HERE FOR ILLUSTRATIVE PURPOSES ONLY. A HALF PLAN CAN BE UTILIZED ONLY WHEN THE ABUTMENT IS SYMMETRICAL ABOUT THE CENTERLINE. IN MOST CASES, THE ENTIRE ABUTMENT PLAN MUST BE SHOWN.

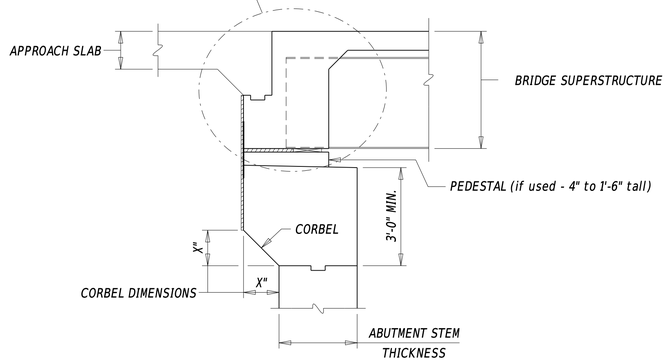

ABUTMENT SECTION (ALTERNATE)

NOTE: SEE DETAIL 325.01 FOR DIAPHRAGM DETAILS AND REINFORCEMENT

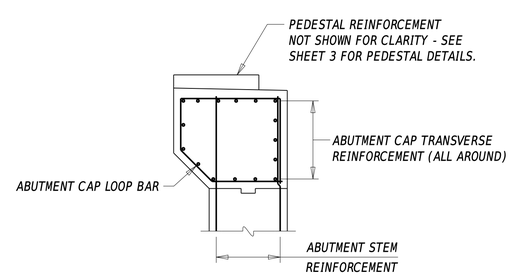

ABUTMENT REINFORCEMENT (ALTERNATE)

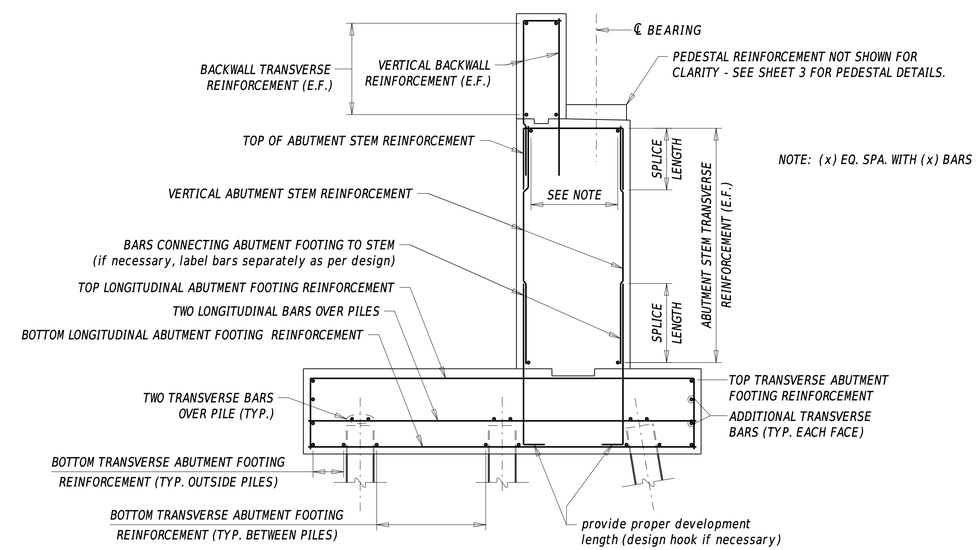

ABUTMENT REINFORCEMENT

DELDOT BRIDGE DESIGN SECTION	DELAWARE DEPARTMENT OF TRANSPORTATION BRIDGE DESIGN MANUAL	CANTILEVER ABUTMENT DETAILS	NOT TO SCALE	ISSUE DATE 2022
				DETAIL No. 310.01
				SHEET No. 2 of 4

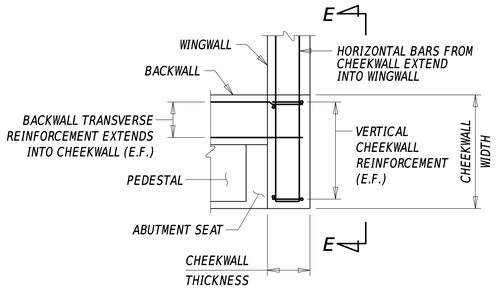

PLAN

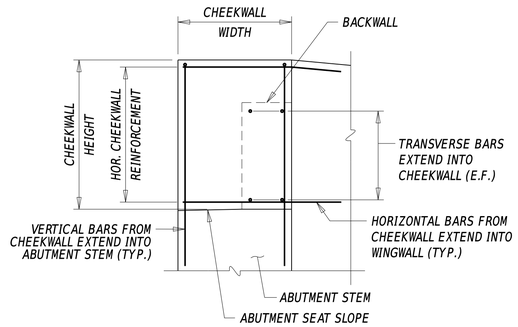

ELEVATION (E-E)

CHEEKWALL DETAILS

NOTE: THIS EXAMPLE DEPICTS A CHEEKWALL USED WITH A CANTILEVER WINGWALL AS SHOWN ON SHEET 4. SEE 107.4.5.7 FOR MORE INFORMATION ON OTHER CONFIGURATIONS.

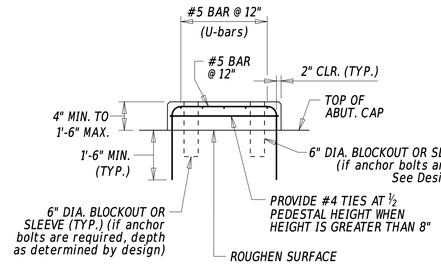

NOTE: POTENTIAL ANCHOR BOLTS NOT SHOWN FOR CLARITY.

SECTION (D-D)

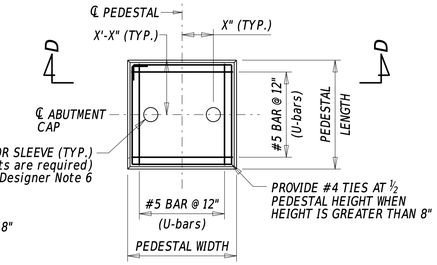

NOTE: C-C GIRDER, SKEW, AND POTENTIAL ANCHOR BOLTS NOT SHOWN FOR CLARITY.

PLAN (C-C)

PEDESTAL DETAILS

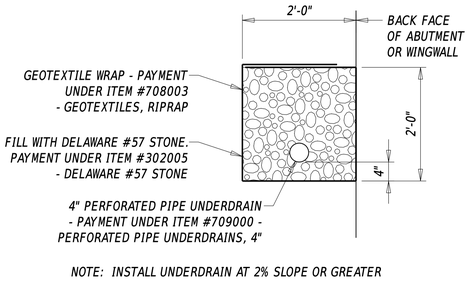

NOTE: INSTALL UNDERDRAIN AT 2% SLOPE OR GREATER

UNDERDRAIN DETAIL

NOTE: THIS EXAMPLE DEPICTS ABUTMENT TYPE V AS DESCRIBED IN BDM 103.6.2 AND AS SHOWN ON DETAIL 325.01 SHEET 2 'TYPICAL SECTION AT ABUTMENTS' AND DETAIL 325.03 SHEET 1 SECTION A-A. ALSO SEE JOINT DETAILS ON DETAIL 340.01

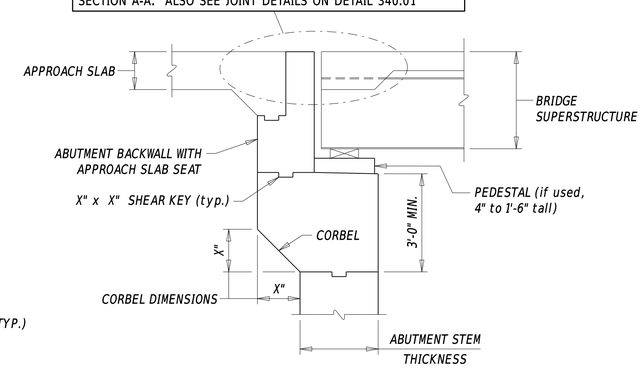

ABUTMENT SECTION (TYPE V ABUTMENT)

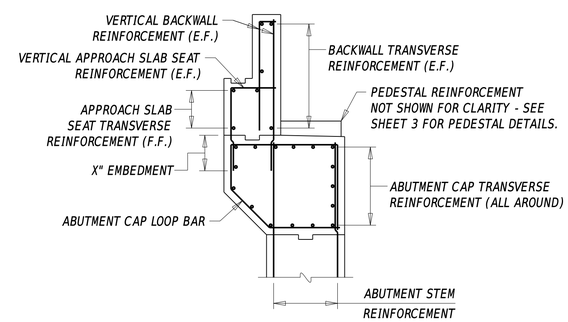

ABUTMENT REINFORCEMENT (TYPE V ABUTMENT)

NOTE: TYPE V TRADITIONAL ABUTMENT IS DEPICTED HERE FOR REFERENCE PURPOSES AND USE ON REHABILITATION PROJECTS. SEE SECTION 103.6.2 FOR MORE INFORMATION ON THE USE OF THIS TYPE OF ABUTMENT.

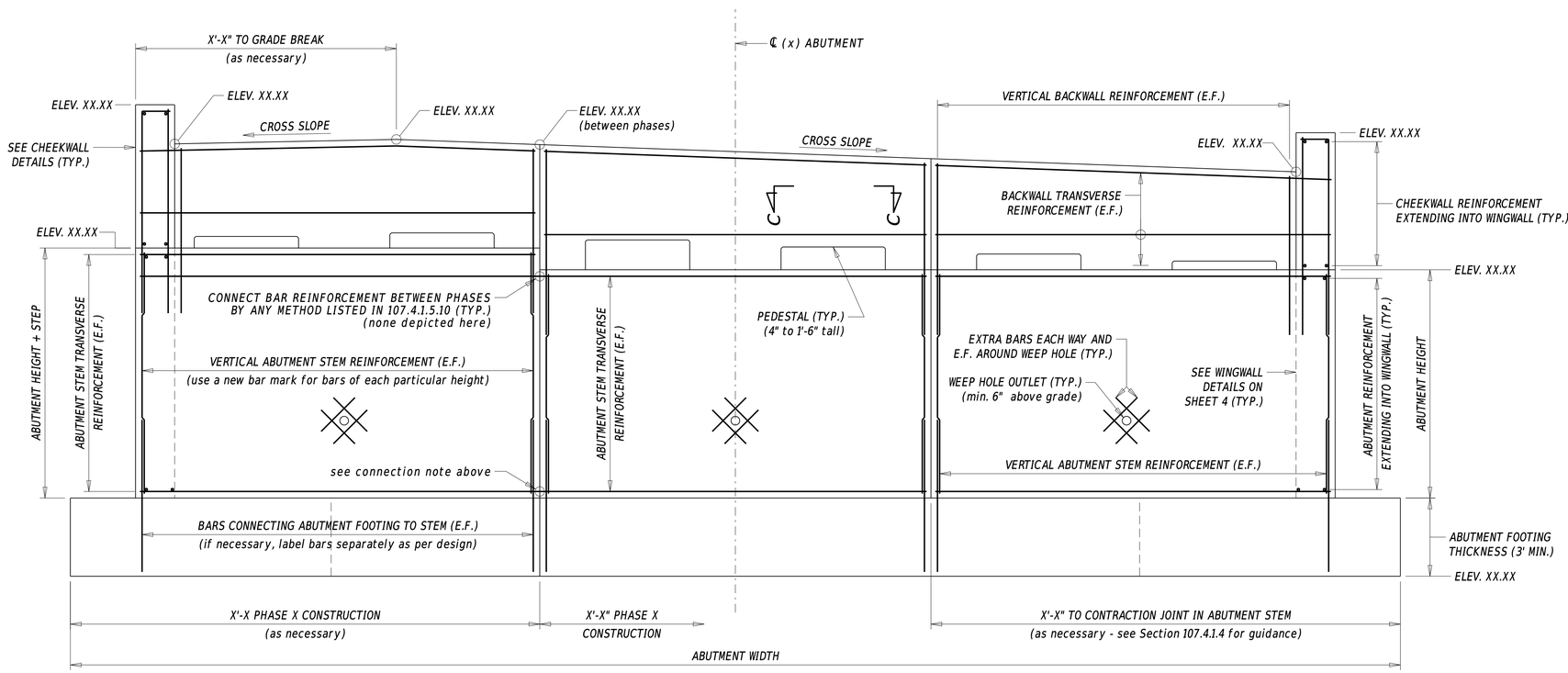

NOTE: THIS DETAIL LABELS EACH REINFORCING BAR IN ONE LOCATION ONLY. ON PLAN DETAILS, EACH BAR NEEDS TO BE LABELED IN EACH SECTION OR PHASE OF THE CONSTRUCTION.

NOTE: WINGWALL STEM AND ABUTMENT FOOTING REINFORCEMENT NOT SHOWN FOR CLARITY.

ABUTMENT ELEVATION

NOTE: THIS EXAMPLE DEPICTS AN APPROACH SLAB (SEE DETAIL 325.03 SHEET 1 SECTION B-B) USED WITH THE DECK EXTENSION DETAILS AS DESCRIBED IN BDM 103.6.2.

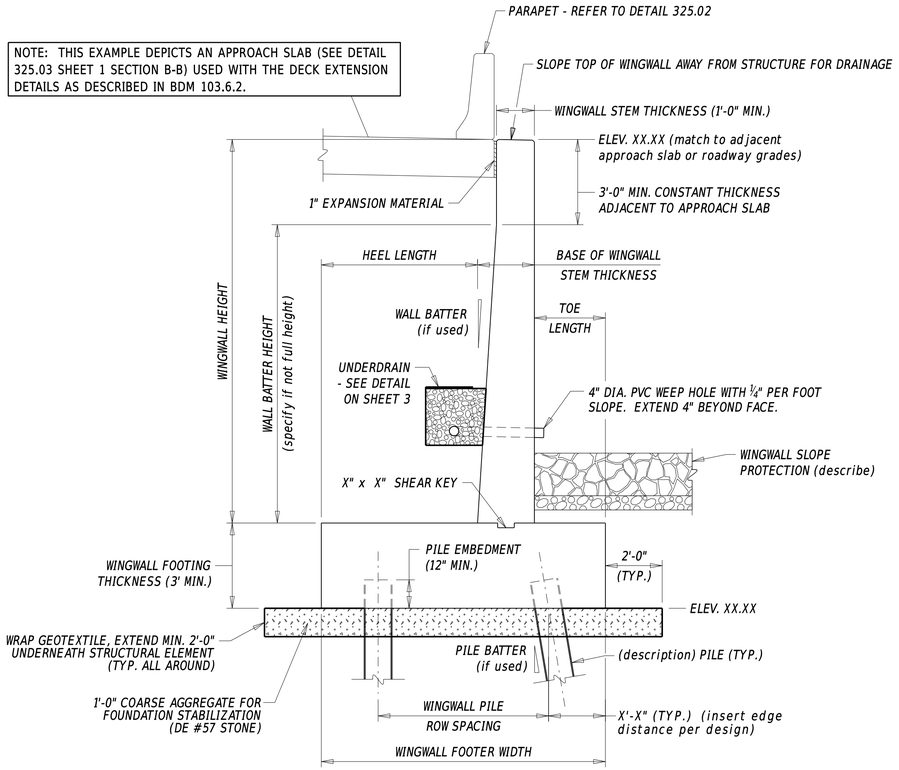

WINGWALL SECTION (B-B)

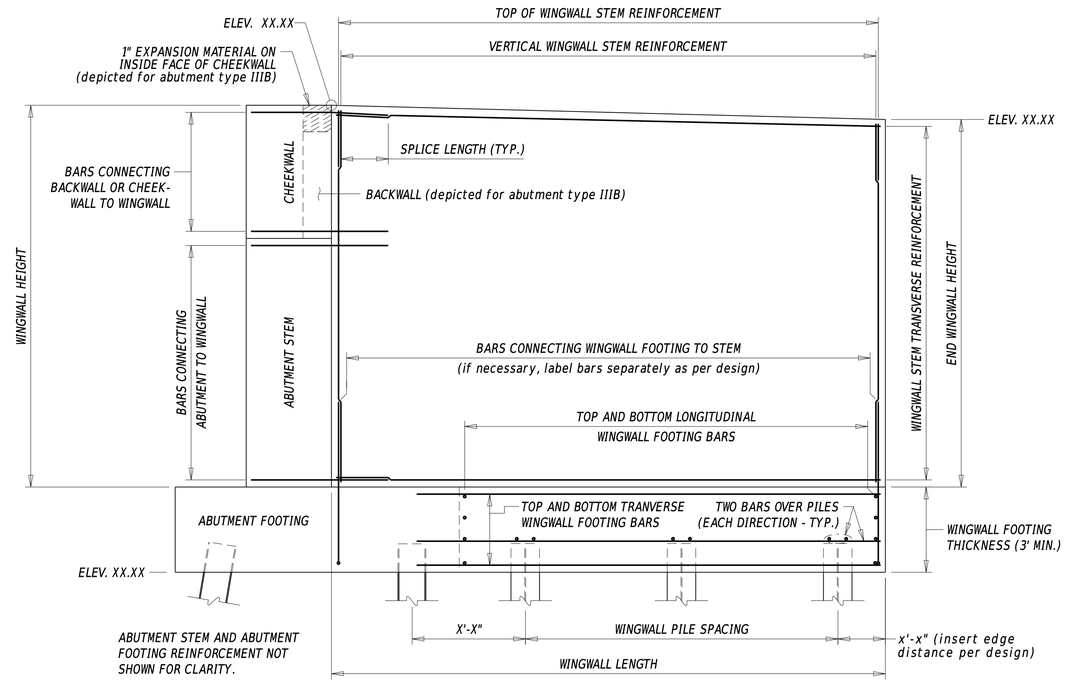

NOTE: WHERE REINFORCEMENT OR DIMENSIONS DIFFER BETWEEN WINGWALLS, PROVIDE A DETAIL FOR EACH ONE. IF WINGWALLS DIFFER ONLY SLIGHTLY IN ELEVATIONS, IT CAN BE LABELED ON ONE DETAIL.

WINGWALL ELEVATION

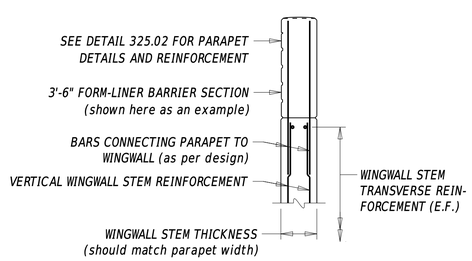

WINGWALL WITH PARAPET DETAIL

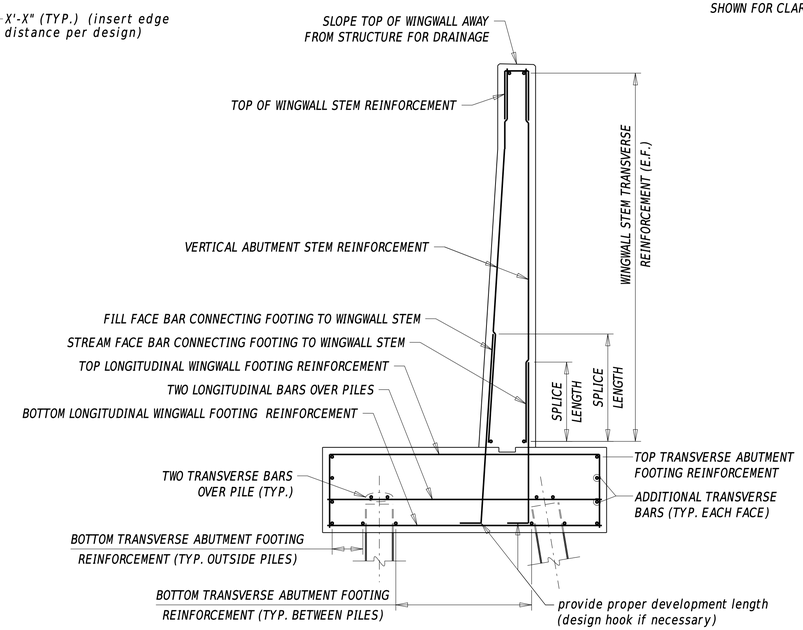

WINGWALL REINFORCEMENT

DESIGNER NOTES

1. REFER TO SECTIONS 103.6.2, 107.4.1, 210 AND 211 FOR MORE INFORMATION ON ABUTMENT DESIGN.
2. ON SMALL PROJECTS, PILE NUMBERS AND WORKING POINTS CAN USE A NUMERICAL SEQUENCE. FOR LARGE PROJECTS, ADD A SPECIFIC IDENTIFIER FOR EACH SUBSTRUCTURE ELEMENT SUCH AB-xx FOR AN ABUTMENT OR P1-xx, P2-xx FOR PIERS.
3. STEEL H-PILES ARE DEPICTED IN THESE DETAILS AS THE PREFERRED OPTION FOR CANTILEVER ABUTMENTS. ALTERNATELY, PRECAST CONCRETE PILES OR CAST-IN-PLACE CONCRETE PILES MAY BE USED. THE DESIGNER SHOULD BE AWARE THAT FLUTED STEEL PILE SHELLS FOR CAST-IN-PLACE CONCRETE PILES ARE NOT CURRENTLY AVAILABLE.
4. PILE EMBEDMENT IS TYPICALLY 1'-0".
5. THE 'PEDESTAL ELEVATIONS' TABLE MUST BE SHOWN ON THE PLANS FOR EACH PEDESTAL LOCATION.
6. FOR MORE INFORMATION ON ALLOWABLE ALTERNATIVE BLOCKOUT SIZES, REFER TO SECTIONS 106.10.9.2, 107.4.1.5.3, AND 107.5.3 AND ALSO DETAIL NO. 345.01 - ELASTOMERIC BEARING DETAILS. NOTE THAT POTENTIAL ANCHOR RODS FOR MASONRY PLATES NOT SHOWN IN THIS DETAIL.
7. ABUTMENT PLAN NAMING CONVENTION - WHEN NECESSARY, IDENTIFY ABUTMENTS WITH DIFFERING DETAILS BY LABELING WITH 1/2 or A/B or A DIRECTIONAL LABEL (NORTH/SOUTH/EAST/WEST).
8. REBAR NAMING CONVENTION - IN GENERAL, REBAR RUNNING PARALLEL TO THE BASELINE IS LABELED 'LONGITUDINAL' AND REBAR RUNNING PERPENDICULAR TO THE BASELINE IS LABELED 'TRANSVERSE.' THE EXCEPTION TO THIS CONVENTION IS FOR WINGWALLS. SINCE WINGWALLS CAN HAVE DIFFERING ORIENTATIONS TO THE BASELINE, THE LOCAL CONVENTION FOR WINGWALLS IS APPLIED WHILE LOOKING AT THE WINGWALL ELEVATION. 'LONGITUDINAL' REBAR RUNS INTO THE PAGE AND 'TRANSVERSE' RUNS ACROSS THE FACE. ON PLANS, ALL OF THESE LABELS ARE REPLACED BY ACTUAL BAR MARKS.

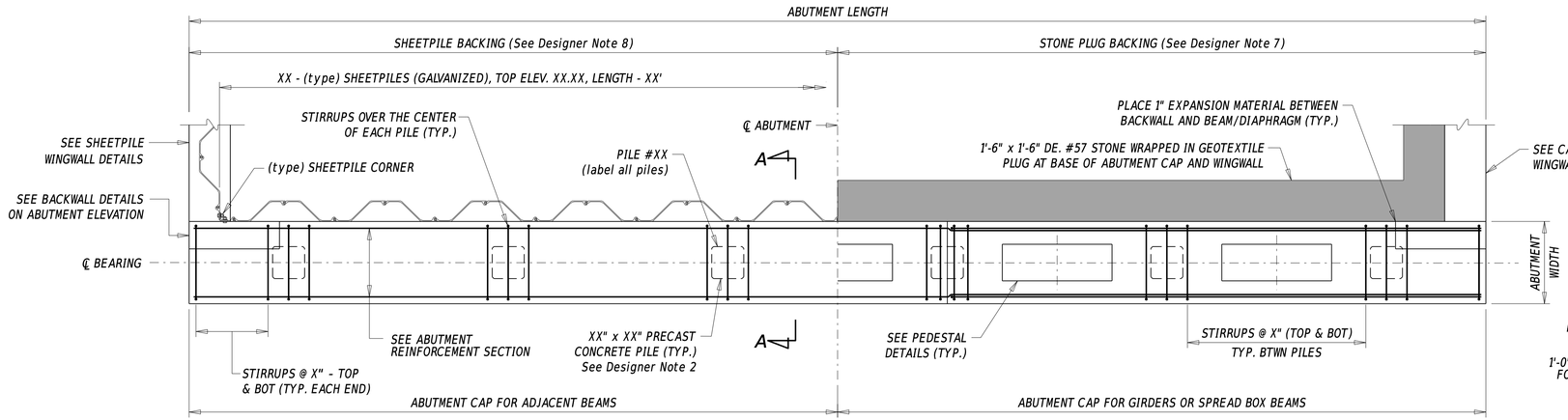

ABUTMENT (name) PLAN

See Detail 310.02, Sheet 5, Designer Note 10

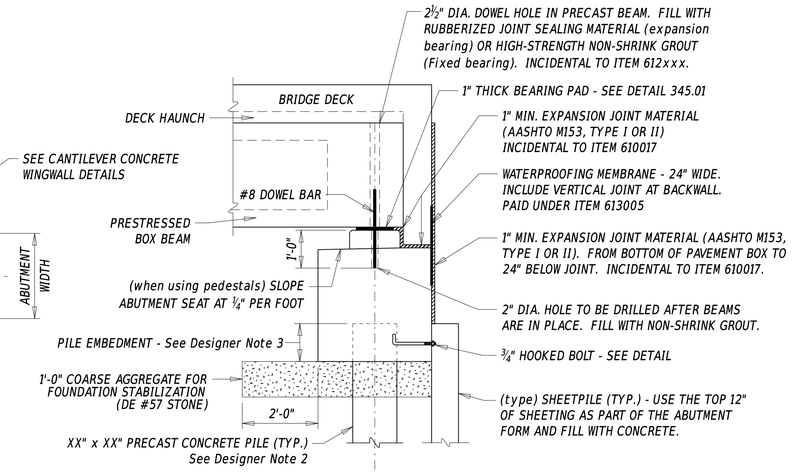

TYPICAL ABUTMENT SECTION A-A

EXAMPLE: A TYPE IIA ABUTMENT (SEMI-INTEGRAL STUB ABUTMENT) USING SPREAD BOX BEAMS ON PEDESTAL WITH SHEETPILE BACKING. FOR AN EXAMPLE USING ADJACENT BOX BEAMS, SEE DETAIL 325.01, SHEET 2, DECK SLAB POUROVER DETAIL. FOR AN EXAMPLE USING NEXT BEAMS, SEE DETAIL 330.03, SHEET 3, END DIAPHRAGM DETAIL.

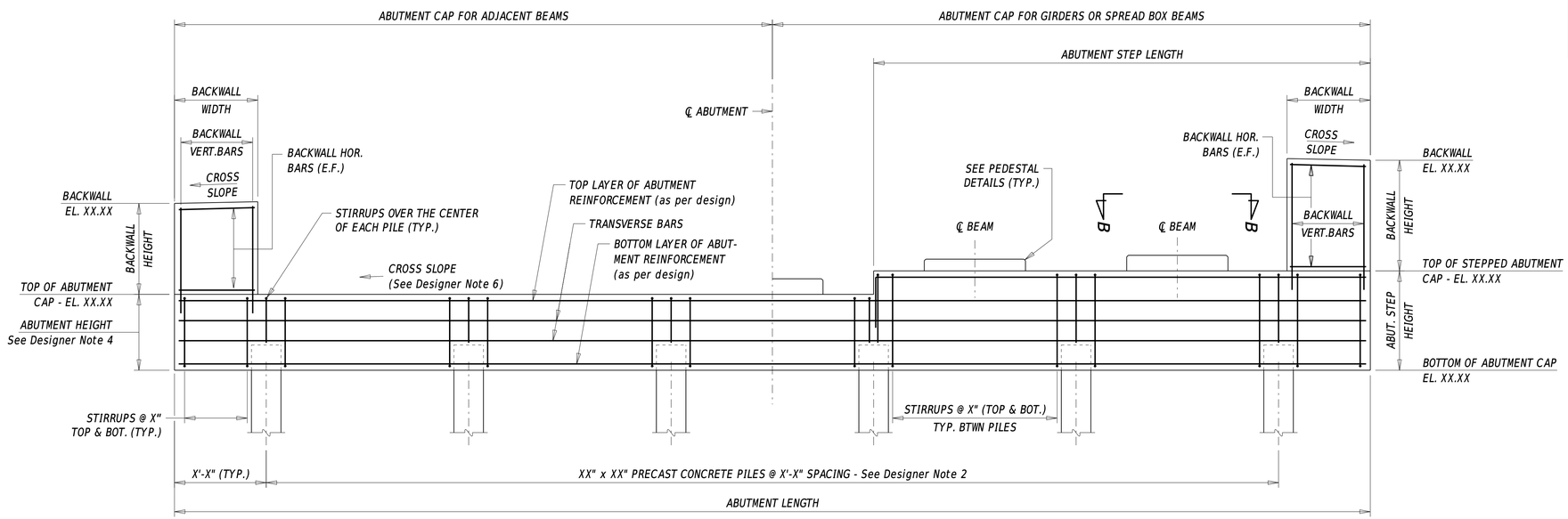

ABUTMENT ELEVATION

(LOOKING AHEAD STATIONS)

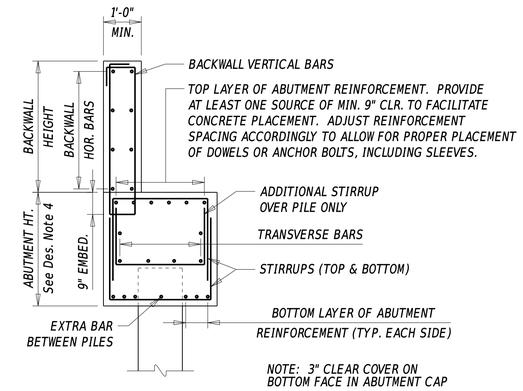

SEE DETAIL 310.02 SHEET 2 FOR PEDESTAL DETAILS

ABUTMENT REINFORCEMENT

NOTE: PILE COORDINATES TABLE MAY BE PLACED ON THE BRIDGE PLAN, SECTION AND ELEVATION DEPENDING ON AVAILABLE SPACE.

ABUTMENT PILE COORDINATES					ABUTMENT PILE COORDINATES				
POINT	STATION	OFFSET	NORTHING	EASTING	POINT	STATION	OFFSET	NORTHING	EASTING
P01	xx+xx.xx	(-)xx.xx	xxxxxx.xx	xxxxxx.xx					

PROVIDE ELEVATIONS FOR ABUTMENTS DETAILED ON THE SAME SHEET ONLY.

℄ PEDESTAL ELEVATIONS							
ABUT	BEAM	ELEV.	HEIGHT	ABUT	BEAM	ELEV.	HEIGHT
xx	x	xx.xx	x.xx'	xx	x	xx.xx	x.xx'
xx	x	xx.xx	x.xx'	xx	x	xx.xx	x.xx'
xx	x	xx.xx	x.xx'	xx	x	xx.xx	x.xx'
xx	x	xx.xx	x.xx'	xx	x	xx.xx	x.xx'
xx	x	xx.xx	x.xx'	xx	x	xx.xx	x.xx'

SHEET PILE NOTES:

1. PROVIDE STEEL SHEET PILES AND FABRICATED PIECES CONFORMING TO ASTM A572 GRADE 50 KSI. GALVANIZE ALL SHEETING ELEMENTS.
2. PROVIDE CONNECTION UNITS COMPATIBLE WITH THE UNITS THEY CONNECT, PERTAINING TO THE ASTM DESIGNATIONS. FOR PAYMENT PURPOSES, TREAT THE CONNECTION PIECES AS PART OF THE ADJACENT UNITS OF SHEET PILING. ALL HARDWARE IS INCIDENTAL TO THE APPROPRIATE SHEETING ITEM.

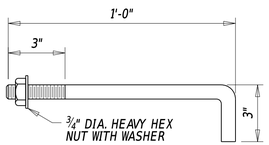

NOTE: INSTALL ONE BOLT PER SHEET. PAYMENT UNDER SHEETING ITEM

¾" ϕ HOOKED BOLT

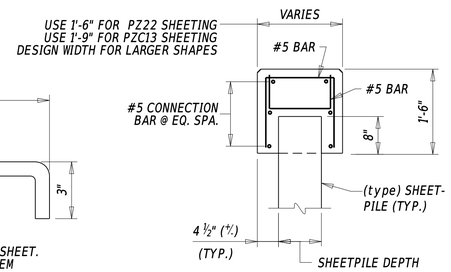

WINGWALL DETAIL

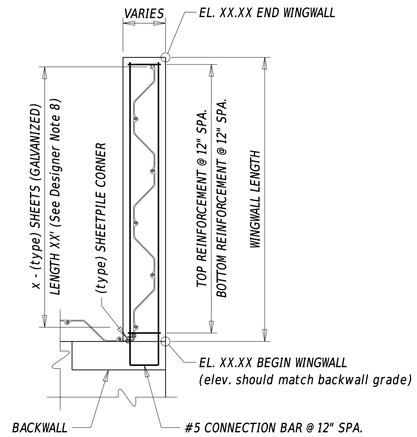

TYPICAL WINGWALL PLAN

SHEETPILE WINGWALL DETAILS

NOTE: SPACE U-BARS TO AVOID CONFLICT WITH DOWEL BAR

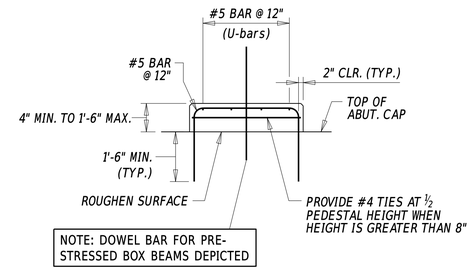

NOTE: DOWEL BAR FOR PRE-STRESSED BOX BEAMS DEPICTED

SECTION (C-C)

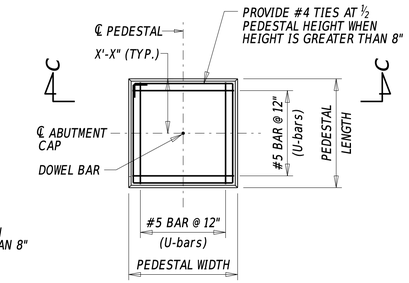

NOTE: C-L GIRDER AND SKEW NOT SHOWN FOR CLARITY.

PLAN (B-B)

PEDESTAL DETAILS

NOTE: FOR PEDESTAL WITH ANCHOR BOLTS, SEE DETAIL 310.01, SHEET 3
See Designer Note 9

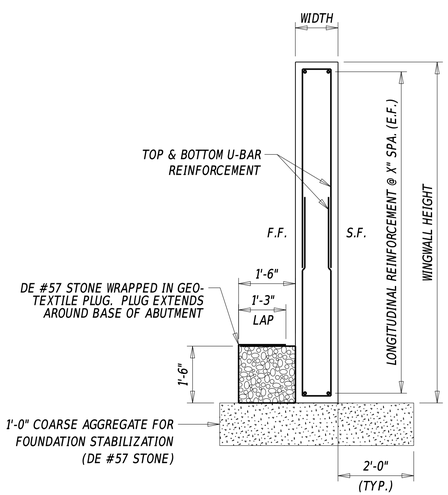

TYPICAL WINGWALL SECTION

LEGEND

E.F. = EACH FACE
F.F. = FILL FACE
S.F. = STREAM FACE

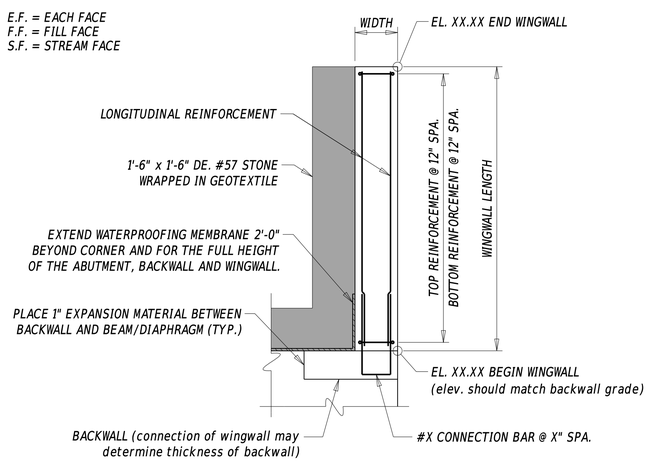

TYPICAL WINGWALL PLAN

CANTILEVER CONCRETE WINGWALL DETAILS

DESIGNER NOTES

1. REFER TO SECTIONS 103.6.2, 107.4.1, 210 AND 211 FOR MORE INFORMATION ON ABUTMENT DESIGN.
2. PRECAST CONCRETE PILES ARE DEPICTED IN THESE DETAILS AS THE PREFERRED OPTION FOR STUB ABUTMENTS. THE DESIGNER SHOULD BE AWARE THAT FLUTED STEEL PILE SHELLS FOR CAST-IN-PLACE CONCRETE PILES ARE NOT CURRENTLY AVAILABLE.
3. PILE EMBEDMENT IS TYPICALLY 1'-0". WITH STONE PLUG BACKING, USE 2'-0" PILE EMBEDMENT.
4. FOR ABUTMENT CAPS WITH SHEETPILE BACKING, THE MINIMUM HEIGHT IS 3'-0". WITH STONE PLUG BACKING, THE MINIMUM HEIGHT IS 4'-0".
5. THE 'PEDESTAL ELEVATIONS' TABLE MUST BE SHOWN ON THE PLANS FOR EACH PEDESTAL LOCATION.
6. IN ADJACENT BOX BEAMS BRIDGES, THE ROADWAY CROSS SLOPE MAY BE BUILT INTO THE ABUTMENT CAP IF THE CROSS SECTION GEOMETRY ALLOWS. ALTERNATELY, THE ABUTMENT CAP CAN BE MADE LEVEL, WITH THE ROADWAY CROSS SLOPE BUILT INTO THE BRIDGE DECK. THE DESIGNER SHOULD EVALUATE THE EFFECT OF EACH OPTION ON THE THICKNESS OF THE DECK (IN CONJUNCTION WITH THE PROFILE AND BEAM CAMBER). REFER TO DETAIL 325.01 SHEET 4, DESIGNER NOTE 20; BDM 106.4.2.2, 106.4.2.3.2 AND 106.9.8.1 FOR MORE INFORMATION AND CONSIDERATIONS.
7. ABUTMENT BACKING: SHEETPILE IS TYPICALLY INSTALLED WITH CAST-IN-PLACE ABUTMENTS. THE STONE PLUG IN TYPICALLY USED WITH PRECAST ABUTMENTS FOR QUICKER CONSTRUCTION. HOWEVER, THE DESIGNER MAY CHOOSE TO USE EITHER DETAIL AS APPROPRIATE TO SITE CONDITIONS.
8. SHEETPILE LAYOUTS: THE DESIGNER MAY UTILIZE PZ, PZC OR SCZ SHEETPILE SHAPES WITH APPROPRIATE COMPATIBLE CONNECTIONS AND CORNERS (see www.pilepro.com). DEPICT ONE LAYOUT THAT FITS THE PROJECT-SPECIFIC GEOMETRY. HOWEVER, BEWARE THAT THE CONTRACTOR MAY SUBMIT ALTERNATE DESIGNS AND LAYOUTS THAT DO NOT MATCH THE PLAN LAYOUT.
9. FOR MORE INFORMATION ON ALLOWABLE ALTERNATIVE BLOCKOUT SIZES, REFER TO SECTIONS 106.10.9.2, 107.4.1.5.3, AND 107.5.3 AND ALSO DETAIL NO. 345.01 - ELASTOMERIC BEARING DETAILS. NOTE THAT POTENTIAL ANCHOR RODS FOR MASONRY PLATES NOT SHOWN IN THIS DETAIL.

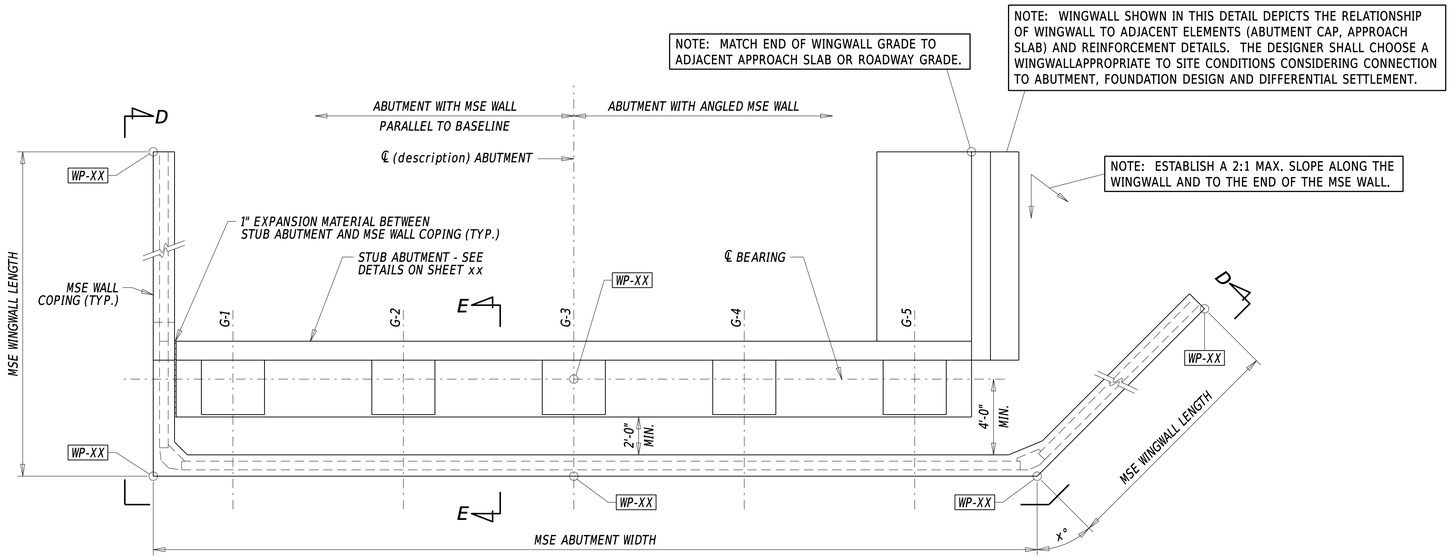

ABUTMENT (name) PLAN

See Designer Note 10

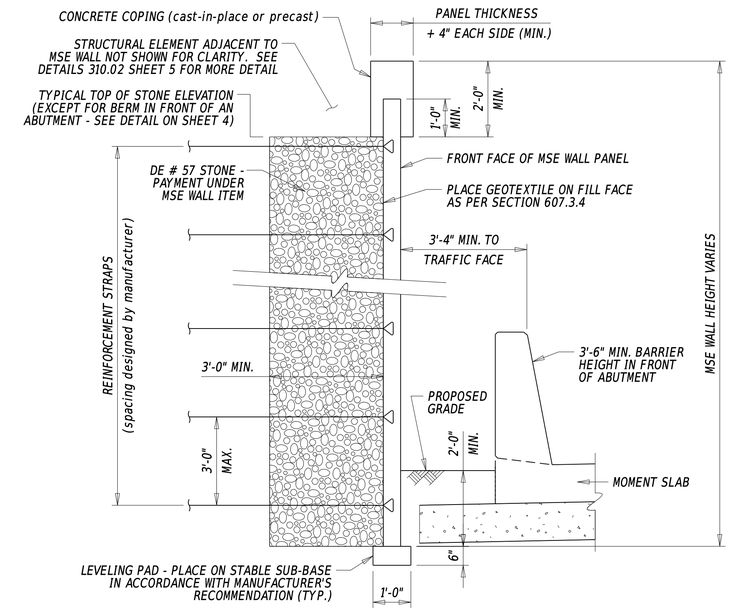

MSE WALL SECTION

See Designer Note 8

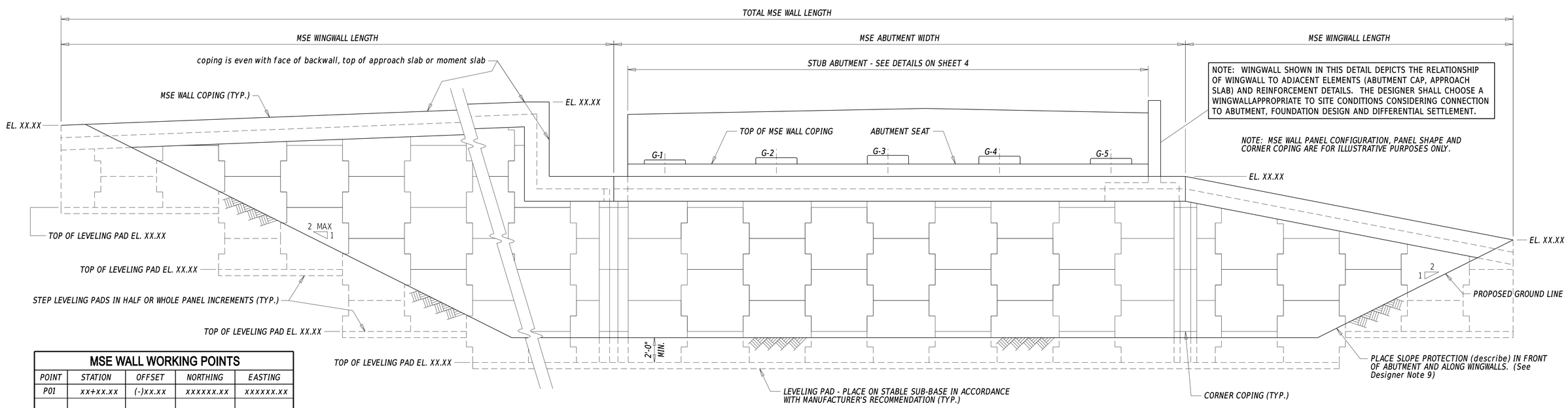

MSE WALL ELEVATION (D-D)

See Designer Note 8

MSE WALL WORKING POINTS

POINT	STATION	OFFSET	NORTHING	EASTING
P01	xx+xx.xx	(-)xx.xx	xxxxxx.xx	xxxxxx.xx

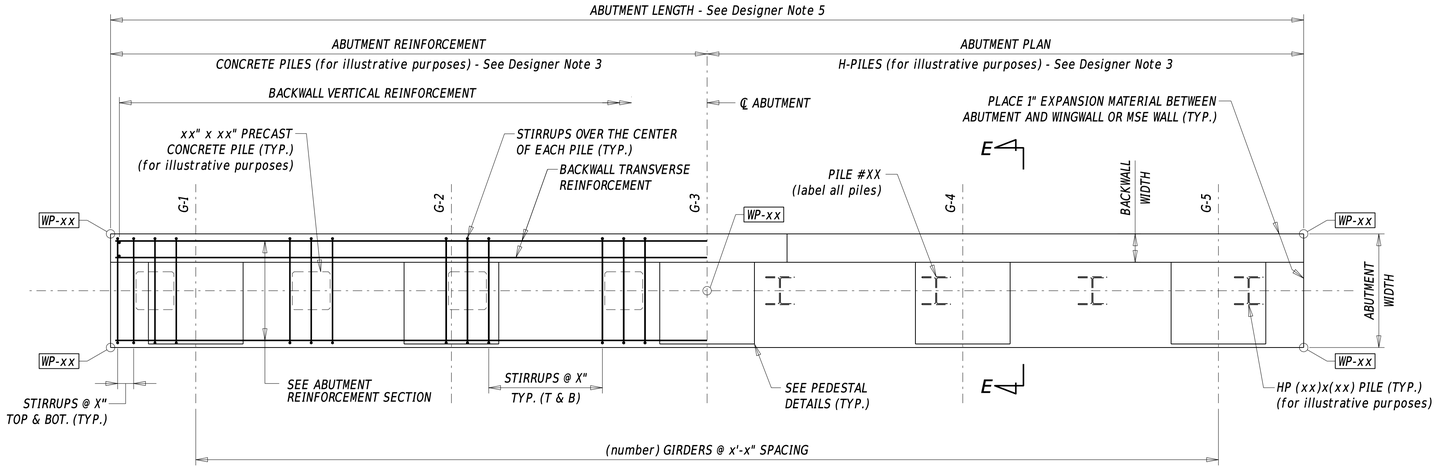

ABUTMENT (name) PLAN AND REINFORCEMENT

See Designer Note 10

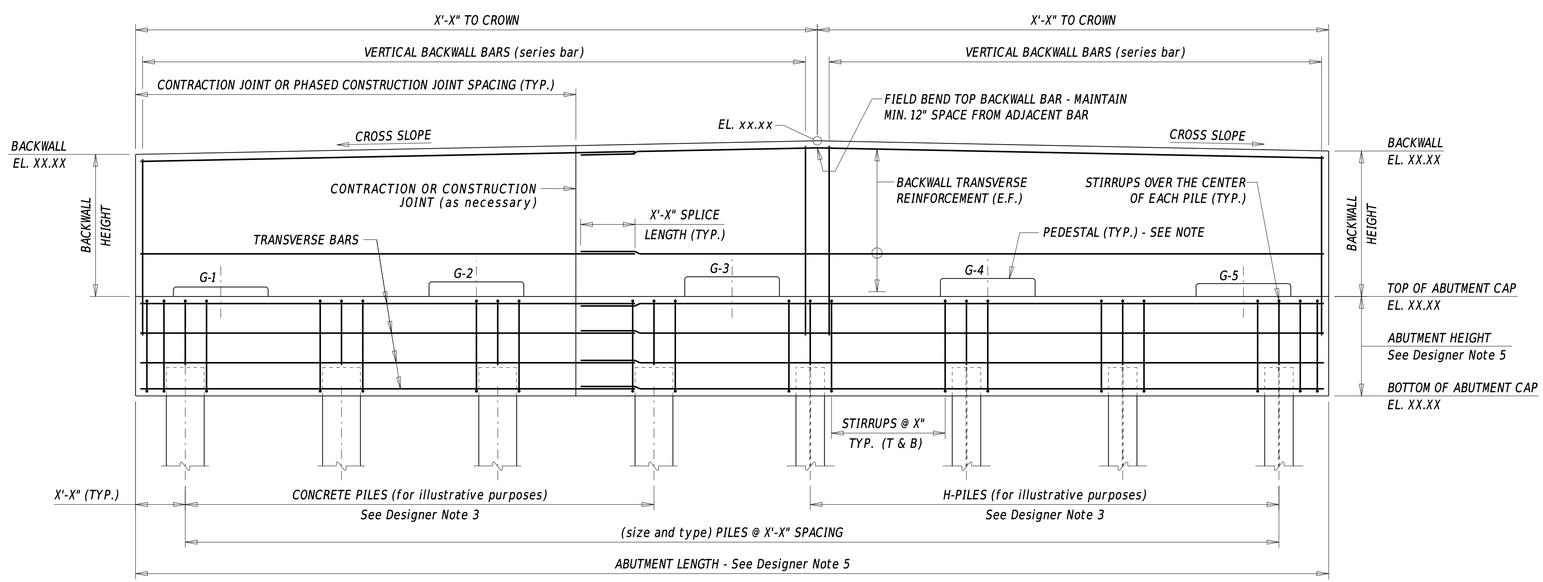

ABUTMENT ELEVATION

SEE DESIGNER NOTE #2 FOR PILE COORDINATE AND WORKING POINT NAMING CONVENTION

ABUTMENT WORKING POINTS

POINT	STATION	OFFSET	NORTHING	EASTING
WP01	xx+xx.xx	(-)xx.xx	xxxxxx.xx	xxxxxx.xx

ABUTMENT PILE COORDINATES

POINT	STATION	OFFSET	NORTHING	EASTING
P01	xx+xx.xx	(-)xx.xx	xxxxxx.xx	xxxxxx.xx

See Designer Note 2

PROVIDE ELEVATIONS FOR ABUTMENTS DETAILED ON THE SAME SHEET ONLY.

℄ PEDESTAL ELEVATIONS

ABUT	BEAM	ELEV.	HEIGHT	ABUT	BEAM	ELEV.	HEIGHT
xx	x	xx.xx	x.xx'	xx	x	xx.xx	x.xx'
xx	x	xx.xx	x.xx'	xx	x	xx.xx	x.xx'
xx	x	xx.xx	x.xx'	xx	x	xx.xx	x.xx'
xx	x	xx.xx	x.xx'	xx	x	xx.xx	x.xx'
xx	x	xx.xx	x.xx'	xx	x	xx.xx	x.xx'

NOTE: THIS EXAMPLE DEPICTS ABUTMENT TYPE IIIA AS DESCRIBED IN BDM 103.6.2 AND AS SHOWN ON DETAIL 325.03 SHEET 1 SECTION B-B.

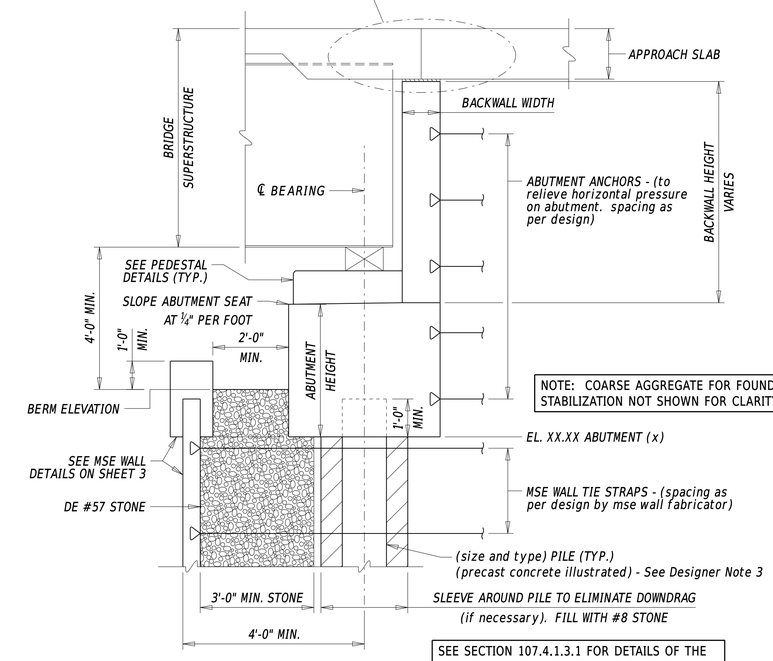

NOTE: COARSE AGGREGATE FOR FOUNDATION STABILIZATION NOT SHOWN FOR CLARITY

SEE SECTION 107.4.1.3.1 FOR DETAILS OF THE MSE WALL LAYOUT RELATIVE TO THE ABUTMENT

TYPICAL ABUTMENT SECTION (E-E)

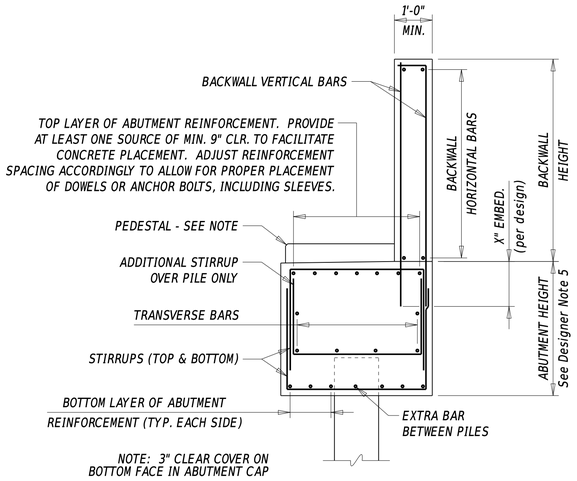

SEE DETAIL 310.02 SHEET 2 FOR PEDESTAL DETAILS

ABUTMENT REINFORCEMENT

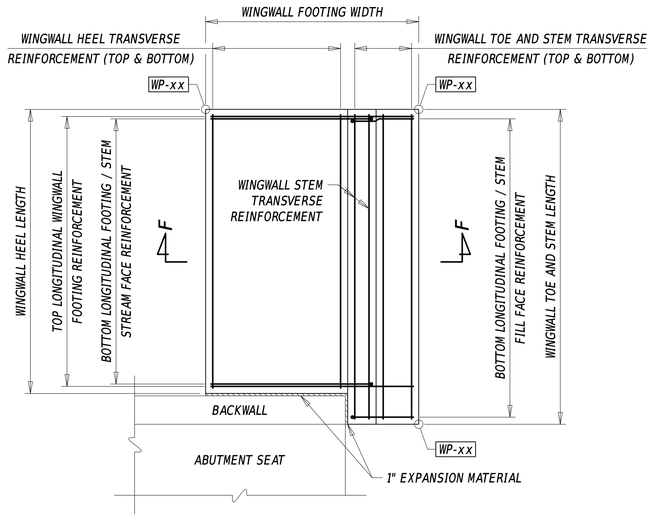

WINGWALL PLAN

NOTE: WINGWALL SHOWN IN THIS DETAIL DEPICTS THE RELATIONSHIP OF WINGWALL TO ADJACENT ELEMENTS (ABUTMENT CAP, APPROACH SLAB) AND REINFORCEMENT DETAILS. THE DESIGNER SHALL CHOOSE A WINGWALLAPPROPRIATE TO SITE CONDITIONS CONSIDERING CONNECTION TO ABUTMENT, FOUNDATION DESIGN AND DIFFERENTIAL SETTLEMENT.

WINGWALL WORKING POINTS

POINT	STATION	OFFSET	NORTHING	EASTING
P01	xx+xx.xx	(-)xx.xx	xxxxxx.xx	xxxxxx.xx

NOTE: MATCH BEGINNING OF WINGWALL GRADE TO ADJACENT DECK GRADE.

NOTE: MATCH END OF WINGWALL GRADE TO ADJACENT APPROACH SLAB OR ROADWAY GRADE.

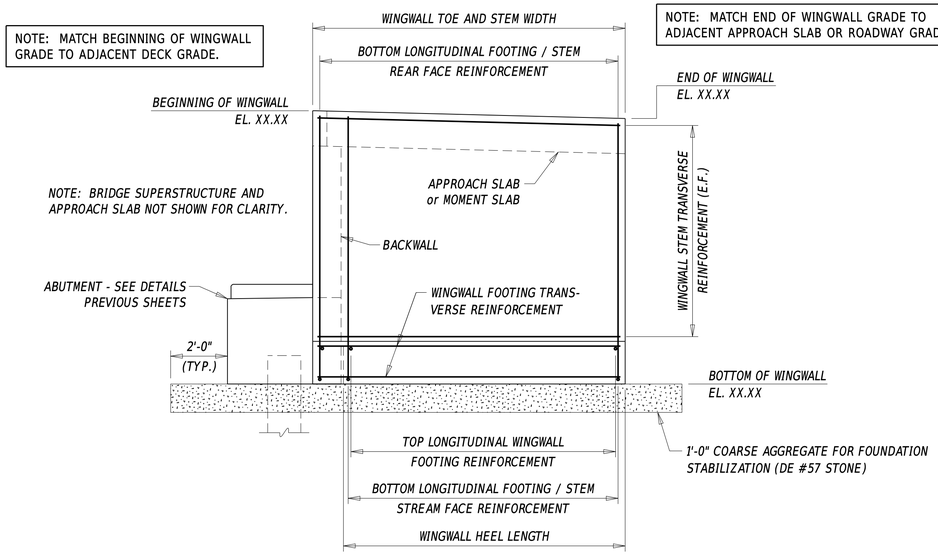

WINGWALL ELEVATION

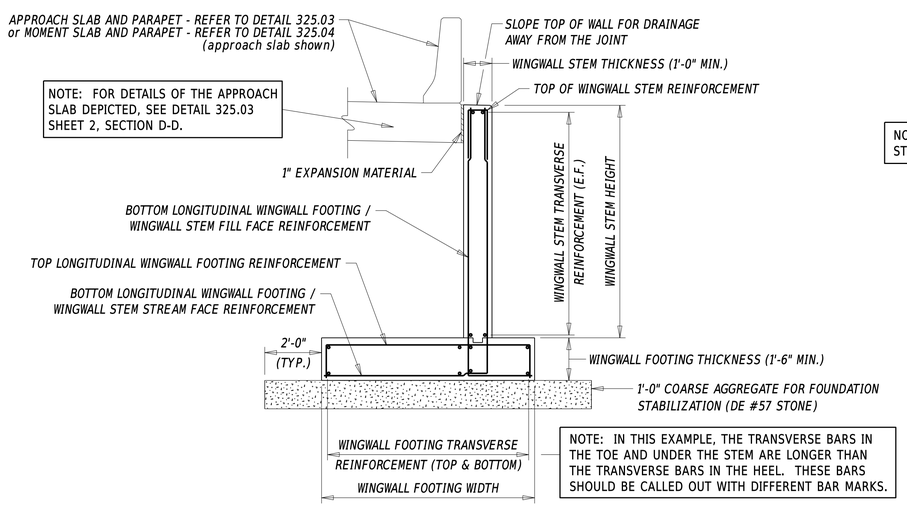

WINGWALL SECTION (F-F)

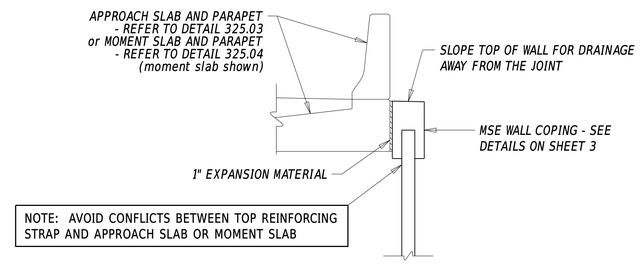

MSE RETAINING WALL DETAIL

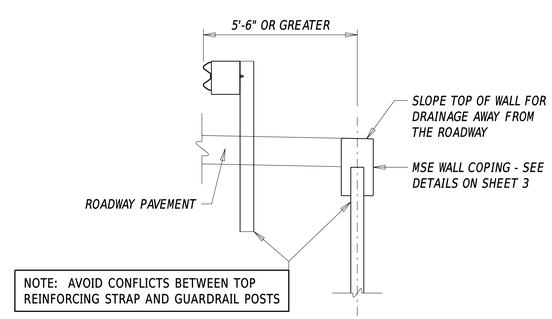

MSE RETAINING WALL AND GUARDRAIL DETAIL

DESIGNER NOTES

1. REFER TO SECTIONS 103.6.2, 107.4.1, 210 AND 211 FOR MORE INFORMATION ON ABUTMENT DESIGN.
2. ON SMALL PROJECTS, PILE NUMBERS AND WORKING POINTS CAN USE A NUMERICAL SEQUENCE. FOR LARGE PROJECTS, ADD A SPECIFIC IDENTIFIER FOR EACH SUBSTRUCTURE ELEMENT SUCH AS AB-xx FOR AN ABUTMENT OR P1-xx, P2-xx FOR PIERS.
3. PRECAST CONCRETE PILES OR H-PILES ARE DEPICTED IN THESE DETAILS AS THE PREFERRED OPTIONS FOR STUB ABUTMENTS WITH MSE WALLS. CHOOSE THE PILE TYPE APPROPRIATE FOR DESIGN REQUIREMENTS AND SITE CONDITIONS. THE DESIGNER SHOULD BE AWARE THAT FLUTED STEEL PILE SHELLS FOR CAST-IN-PLACE CONCRETE PILES ARE NOT CURRENTLY AVAILABLE.
4. PILE EMBEDMENT IS TYPICALLY 1'-0".
5. THE MINIMUM HEIGHT FOR THE ABUTMENT CAP IS 3'-0". INCLUDE EXPANSION OR CONTRACTION JOINTS AS PER SECTION 107.4.1.4.
6. THE 'PEDESTAL ELEVATIONS' TABLE MUST BE SHOWN ON THE PLANS FOR EACH PEDESTAL LOCATION.
7. FOR MORE INFORMATION ON ALLOWABLE ALTERNATIVE BLOCKOUT SIZES, REFER TO SECTIONS 106.10.9.2, 107.4.1.5.3, AND 107.5.3 AND ALSO DETAIL NO. 345.01 - ELASTOMERIC BEARING DETAILS. NOTE THAT POTENTIAL ANCHOR RODS FOR MASONRY PLATES NOT SHOWN IN THIS DETAIL.
8. SEE SECTION 107.6.1 AND STANDARD SPECIFICATIONS SECTION 607 FOR MORE INFORMATION ABOUT MECHANICALLY STABILIZED EARTH (MSE) WALLS. SECTION 107.6.1.2 OUTLINES THE RESPONSIBILITY OF THE DESIGNER AND THE INFORMATION TO BE INCLUDED IN THE PLANS. THE MANUFACTURER WILL DESIGN THE MSE WALL PROPOSED FOR USE ON THE PROJECT AND SUBMIT DETAILS TO THE DEPARTMENT FOR APPROVAL.
9. FOR BRIDGES OVER WATER, SLOPE PROTECTION CONSISTS OF THE DESIGNED SCOUR PROTECTION. FOR OTHER BRIDGES, PLACE R-4 RIPRAP SLOPE PROTECTION ON ALL SLOPES IN FRONT OF THE ABUTMENT (3 ' MIN. WIDTH) AND 3' WIDE ALONG THE FACE OF ALL WINGWALLS TO THE TOP OF SLOPE.
10. ABUTMENT PLAN NAMING CONVENTION - WHEN NECESSARY, IDENTIFY ABUTMENTS WITH DIFFERING DETAILS BY LABELING WITH 1/2 or A/B or A DIRECTIONAL LABEL (NORTH/SOUTH/EAST/WEST).
11. A NOTE ABOUT THE NAMING CONVENTION FOR REBAR IN THESE DETAILS. IN GENERAL, REBAR RUNNING PARALLEL TO THE BASELINE IS LABELED 'LONGITUDINAL' AND REBAR RUNNING PERPENDICULAR TO THE BASELINE IS LABELED 'TRANSVERSE.' tHE EXCEPTION TO THIS CONVENTION IS FOR WINGWALLS. SINCE WINGWALLS CAN HAVE DIFFERING ORIENTATIONS TO THE BASELINE, THE LOCAL CONVENTION FOR WINGWALLS IS APPLIED WHILE LOOKING AT THE WINGWALL ELEVATION. 'LONGITUDINAL' REBAR RUNS INTO THE PAGE AND 'TRANSVERSE' RUNS ACROSS THE FACE. ON PLANS, ALL OF THESE LABELS ARE REPLACED BY ACTUAL BAR MARKS.

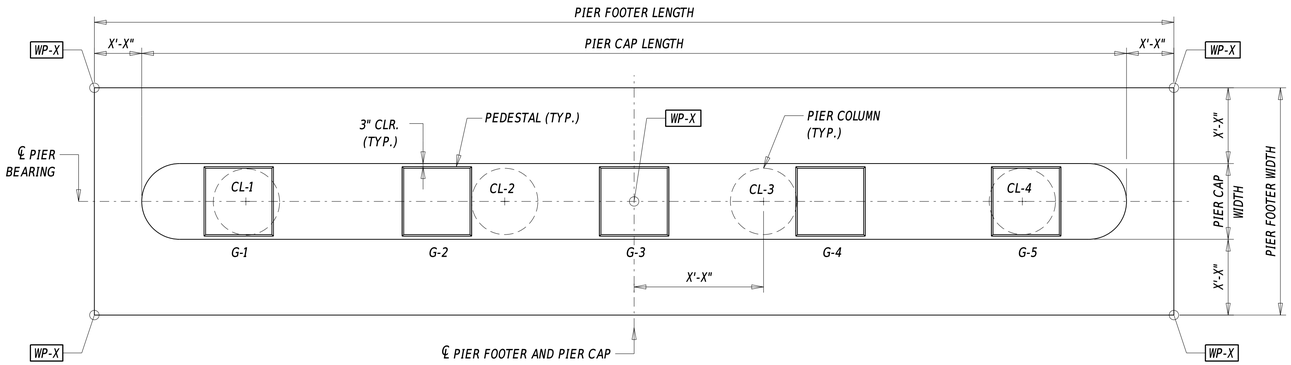

PIER FOOTER AND PIER CAP PLAN

NOTE: C-C GIRDER, SKEW, AND CONSTRUCTION BASELINE UNDER PLAN VIEW NOT SHOWN FOR CLARITY.

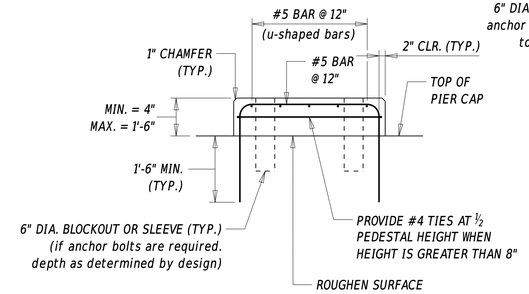

SECTION (D-D)

NOTE: POTENTIAL ANCHOR BOLTS NOT SHOWN FOR CLARITY.

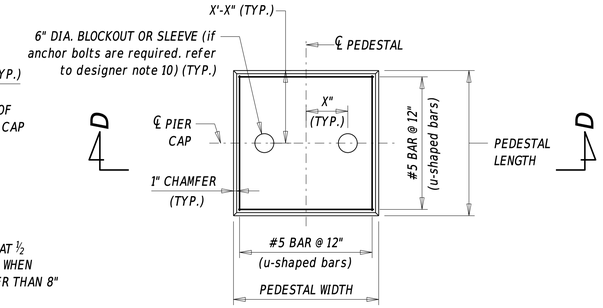

PLAN (B-B)

NOTE: C-C GIRDER, SKEW, AND POTENTIAL ANCHOR BOLTS UNDER PLAN VIEW NOT SHOWN FOR CLARITY.

PEDESTAL REINFORCEMENT

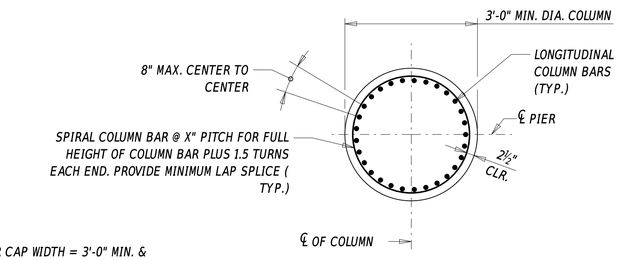

TYPICAL COLUMN SECTION (SECTION C-C)

NOTE: EXAMPLE SHOWN USING SPIRAL REINFORCEMENT. USE OF TIES AS AN ALTERNATIVE IS PERMITTED.

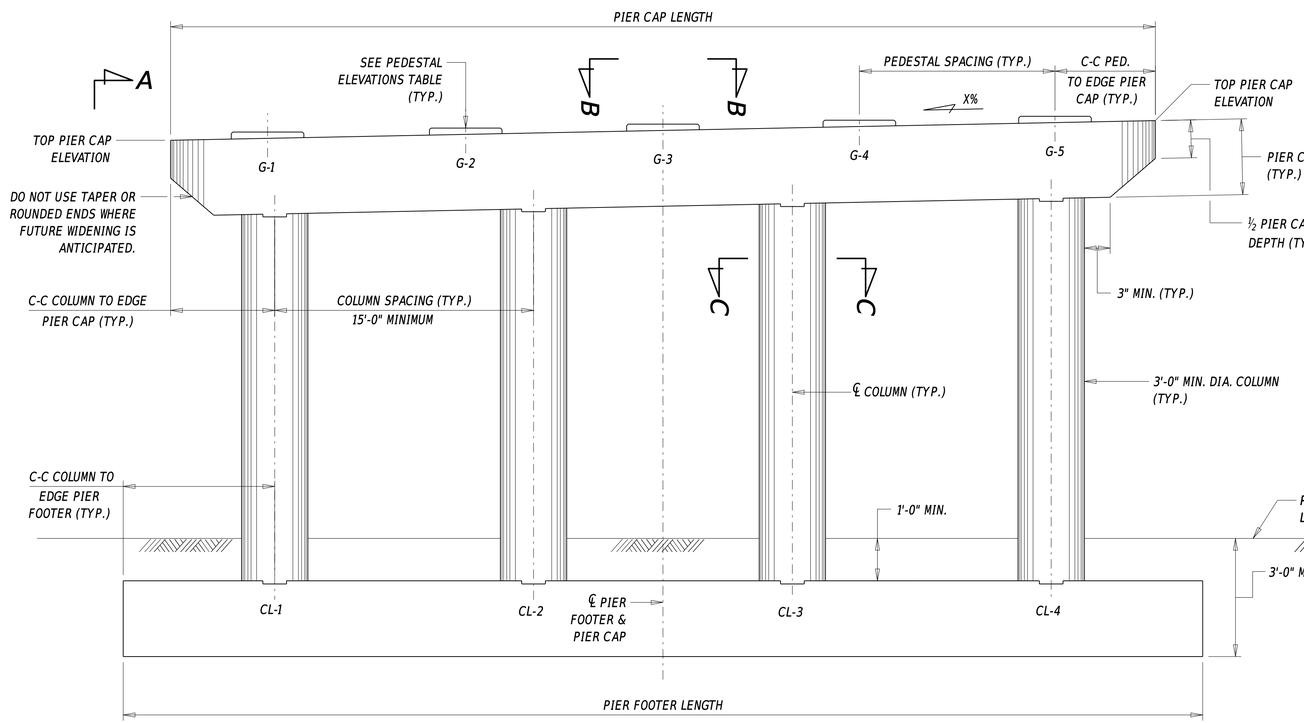

PIER ELEVATION

NOTE: CONSTRUCTION BASELINE AND DEEP FOUNDATION ELEMENTS UNDER ELEVATION AND END VIEWS NOT SHOWN FOR CLARITY. ALSO EXAMPLE UTILIZES CONTINUOUS FOOTING. ISOLATED FOOTINGS MAY BE USED IF DEEMED TO BE ECONOMICAL.

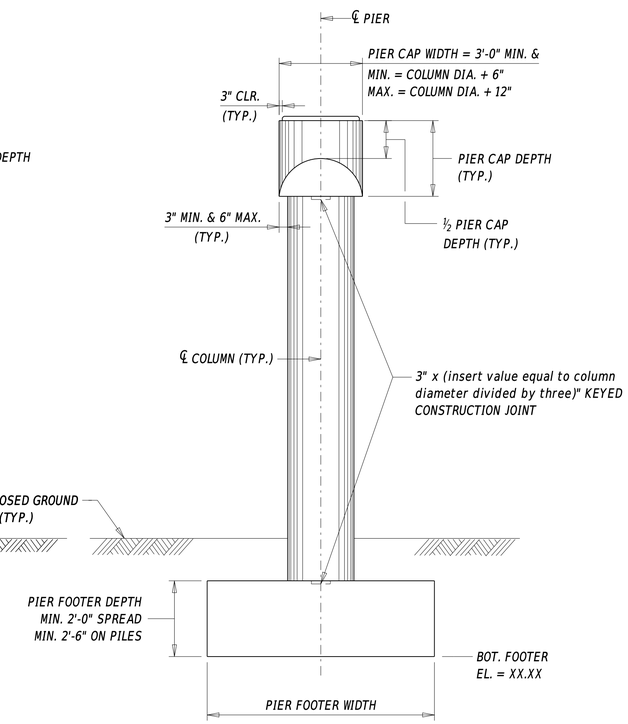

END VIEW (A-A)

NOTE: POTENTIAL PIER PROTECTION NOT SHOWN FOR CLARITY. WHEN REQUIRED, DESIGN PIER PROTECTION IN ACCORDANCE WITH AASHTO LRFD BRIDGE DESIGN SPECIFICATIONS AND INCLUDE DETAILS ON PLANS - See Designer Note 6 and 9.

PEDESTAL ELEVATIONS

GIRDER	ELEVATION
G-1	-------
G-2	-------
G-3	-------
G-4	-------
G-5	-------

PIER COLUMN COORDINATES

POINT	STATION	OFFSET	NORTHING	EASTING
CL-1	-------	-------	-------	-------
CL-2	-------	-------	-------	-------
CL-3	-------	-------	-------	-------
CL-4	-------	-------	-------	-------

NOTE: COORDINATES AT CENTER OF COLUMN.

PIER WORKING POINTS

POINT	STATION	OFFSET	NORTHING	EASTING
WP-X	-------	-------	-------	-------
WP-X	-------	-------	-------	-------
WP-X	-------	-------	-------	-------
WP-X	-------	-------	-------	-------
WP-X	-------	-------	-------	-------

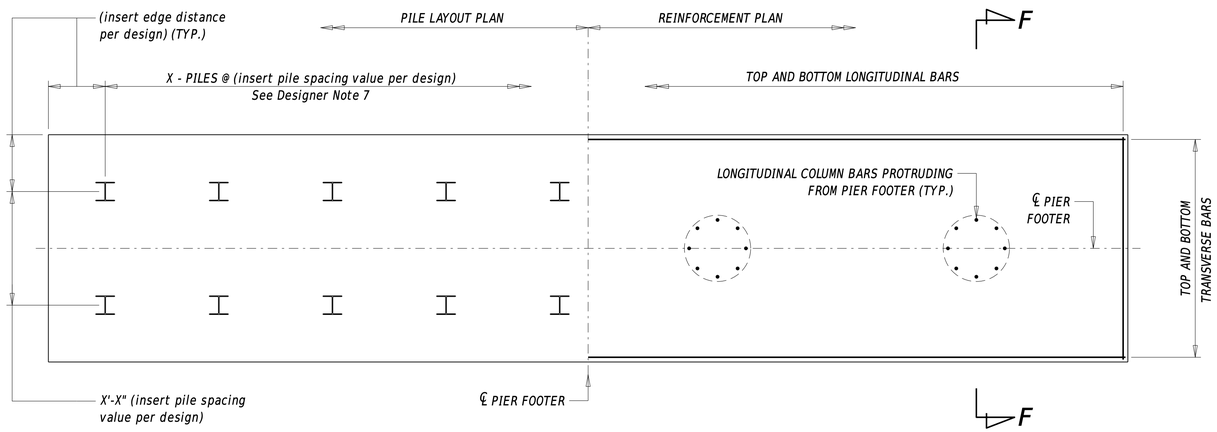

PIER FOOTER REINFORCEMENT AND PILE LAYOUT PLAN

NOTE: PROVIDE WORKING POINTS FOR EACH PILE AND DENOTE ALL BATTERED AND TEST PILES. EXAMPLE SHOWN USING TWO ROWS OF PILES.

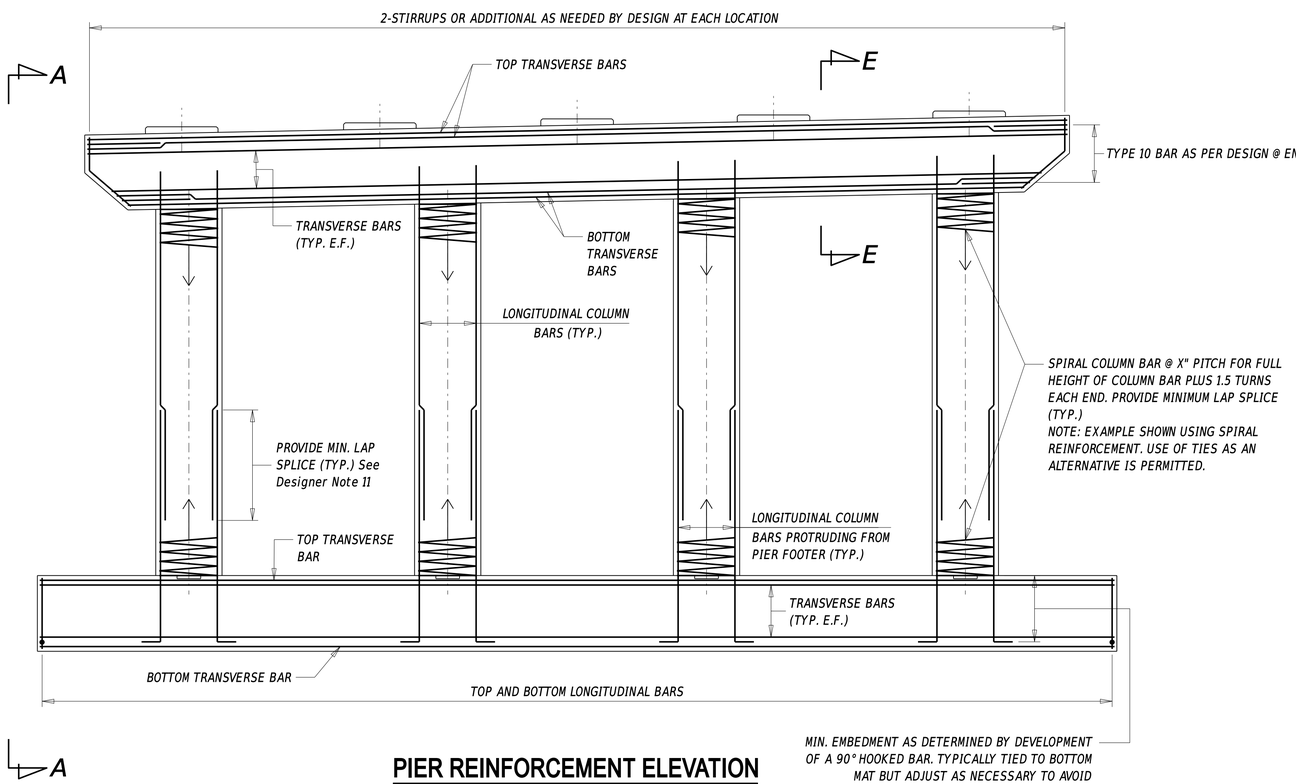

PIER REINFORCEMENT ELEVATION

NOTE: PEDESTAL PAD REINFORCEMENT AND DEEP FOUNDATION ELEMENTS AT ELEVATION VIEW NOT SHOWN FOR CLARITY.

NOTE: PEDESTAL REINFORCEMENT NOT SHOWN FOR CLARITY. REFER TO SECTIONS B-B & D-D. EXAMPLE UTILIZES TWO TOP AND BOTTOM TRANSVERSE ROWS.

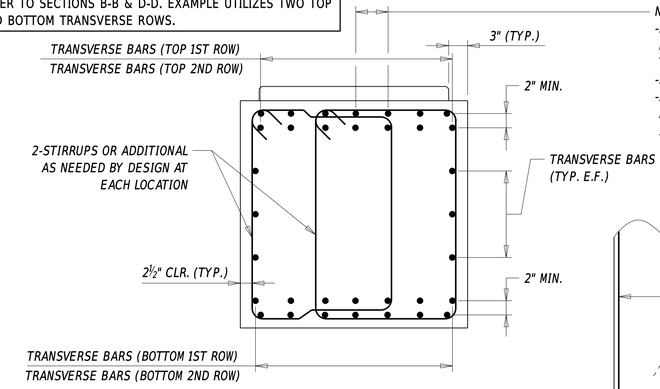

NOTE:
-PROVIDE AT LEAST ONE SOURCE OF MIN. 9" CLR. TO FACILITATE CONCRETE PLACEMENT. FOR CAPS GREATER THAN 5'-0" WIDE, PROVIDE TWO SOURCES OF 9" CLR.
-PROVIDE 6" MIN. AT ALL OTHER SPACES.
-ADJUST REINFORCEMENT SPACING ACCORDINGLY TO ALLOW FOR PROPER PLACEMENT OF DOWELS OR ANCHOR BOLTS, INCLUDING SLEEVES.

SECTION E-E

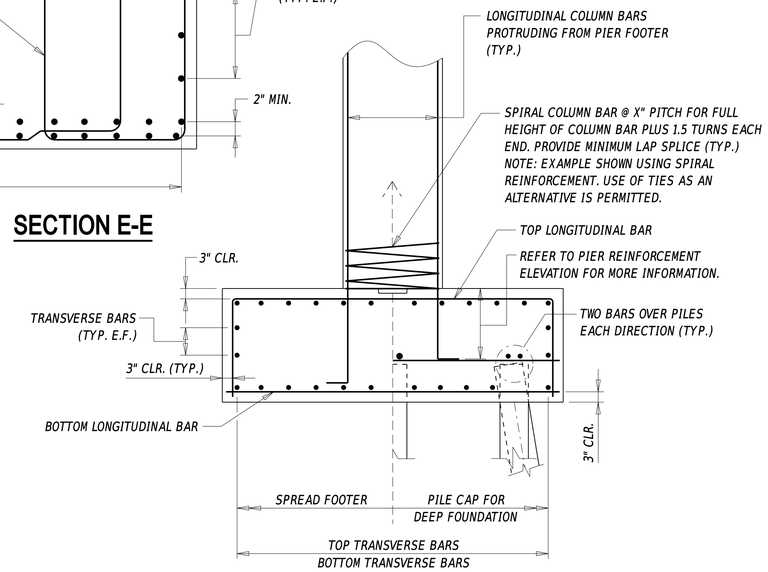

TYPICAL REINFORCEMENT SECTION (F-F)

DESIGNER NOTES

1. REFER TO SECTIONS 103.6.3, 107.5, AND 203 FOR MORE INFORMATION ON PIER DESIGN.
2. THE EXAMPLE PIER USED FOR THIS DETAIL IS A 'CAP-AND-COLUMN' TYPE PIER WITH 4 COLUMNS ON A CONSTANT SMALL SUPERELEVATION GRADE. ALSO THE EXAMPLE ASSUMES 5 GIRDERS ARE PRESENT.
3. THE 'PEDESTAL ELEVATIONS' TABLE MUST BE SHOWN ON THE PLANS FOR EACH PEDESTAL LOCATION.
4. THE 'PIER COLUMN COORDINATES' TABLE MUST BE SHOWN ON THE PLANS FOR EACH COLUMN LOCATION.
5. THE 'PIER WORKING POINTS' TABLE MUST BE SHOWN ON THE PLANS. INCLUDE EACH CORNERS AND CENTER OF THE PIER FOOTER AS A MINIMUM. ADDITIONAL WORKING POINTS MAY BE NEEDED AT STEPS OR CONSTRUCTION JOINT LOCATIONS FOR PHASED CONSTRUCTION.
6. UNDER 'END VIEW (A-A)', EXAMPLE PIER PROTECTION NOT SHOWN FOR CLARITY. OPTIONS FOR PIER PROTECTION MAY INCLUDE: STEEL BEAM GUARDRAIL, F-SHAPED BARRIERS, OR DESIGNING THE PIER TO WITHSTAND VEHICULAR COLLISION. REFER TO SECTION 103.3.4 FOR HORIZONTAL CLEARANCE AND PIER PROTECTION. REFER TO A3.6.5 AND A3.14 FOR MORE INFORMATION ON VEHICULAR AND VESSEL COLLISION FORCES.
7. UNDER 'TYPICAL REINFORCEMENT SECTION (F-F)' AND 'PIER FOOTER REINFORCEMENT AND PILE LAYOUT PLAN' THE EXAMPLE DEEP FOUNDATION ELEMENT USED ARE H-PILES. REFER TO DETAIL NO. 305.01 - 305.04 FOR MORE INFORMATION ON DEEP FOUNDATION ELEMENTS THAT ARE TYPICALLY USED ON DELDOT PROJECTS.
8. UNDER 'PIER REINFORCEMENT ELEVATION' AND 'SECTION E-E', THE EXAMPLE USED UTILIZES TWO TRANSVERSE REINFORCEMENT ROWS AT TOP AND BOTTOM OF PIER CAP.
9. FOR BRIDGES OVER RAILROAD, REFER TO SECTIONS 103.3.4.3, 103.3.5.3, 103.10, AND AC3.6.5.1 FOR MORE INFORMATION ON RAILROAD CLEARANCE ENVELOPES AND HORIZONTAL CLEARANCE LIMITS WHERE THE INCORPORATION OF RAILROAD COLLISION FORCES INTO THE DESIGN OF PIERS IS REQUIRED, WHEN CRASH PROTECTION IS NOT PROVIDED.
10. FOR MORE INFORMATION ON ALLOWABLE ALTERNATIVE BLOCKOUT OR SLEEVE SIZES, REFER TO SECTIONS 106.10.9.2, 107.4.1.5.3, AND 107.5.3 AND ALSO DETAIL NO. 345.01 - ELASTOMERIC BEARING DETAILS. NOTE THAT POTENTIAL ANCHOR RODS FOR MASONRY PLATES NOT SHOWN IN THIS DETAIL.
11. REGARDING SPLICING LONGITUDINAL BARS:
    -ONLY SPLICE BARS IF THE BAR LENGTH EXCEEDS SHIPPING LENGTH REQUIREMENTS OR THE LENGTH IS SUCH THAT ONE PIECE WILL CAUSE CONSTRUCTIBILITY ISSUES BETWEEN THE FOOTER AND COLUMNS.
    -STAGGER SPLICES SUCH THAT NO MORE THAN 50% OF THE REINFORCING BARS ARE SPACED AT ONE LOCATION.
    -USE A 6" MAXIMUM TIE SPACING ALONG THE LENGTH OF THE SPLICE.
    -IF THE ABOVE REQUIREMENTS CANNOT BE MET, FULL MECHANICAL CONNECTION SPLICES CAN BE USED PROVIDED NOT MORE THAN ALTERNATE REINFORCING BARS IN EACH LAYER ARE SPLICED AT A SECTION, AND THE DISTANCE BETWEEN SPLICES OF ADJACENT REINFORCING BARS IS GREATER THAN 24" MEASURED ALONG THE LONGITUDINAL AXIS OF THE COLUMN.

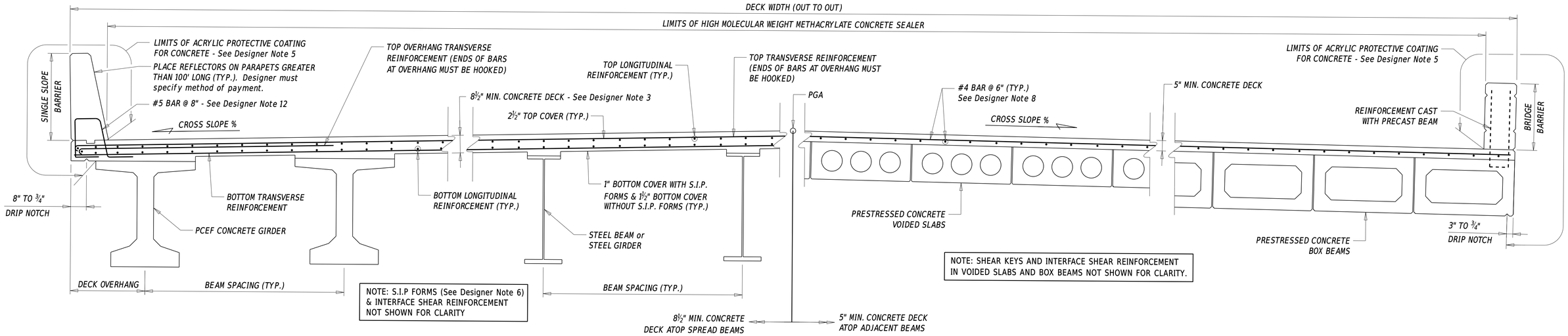

NOTE: S.I.P FORMS (See Designer Note 6) & INTERFACE SHEAR REINFORCEMENT NOT SHOWN FOR CLARITY

NOTE: SHEAR KEYS AND INTERFACE SHEAR REINFORCEMENT IN VOIDED SLABS AND BOX BEAMS NOT SHOWN FOR CLARITY.

DECK SECTION

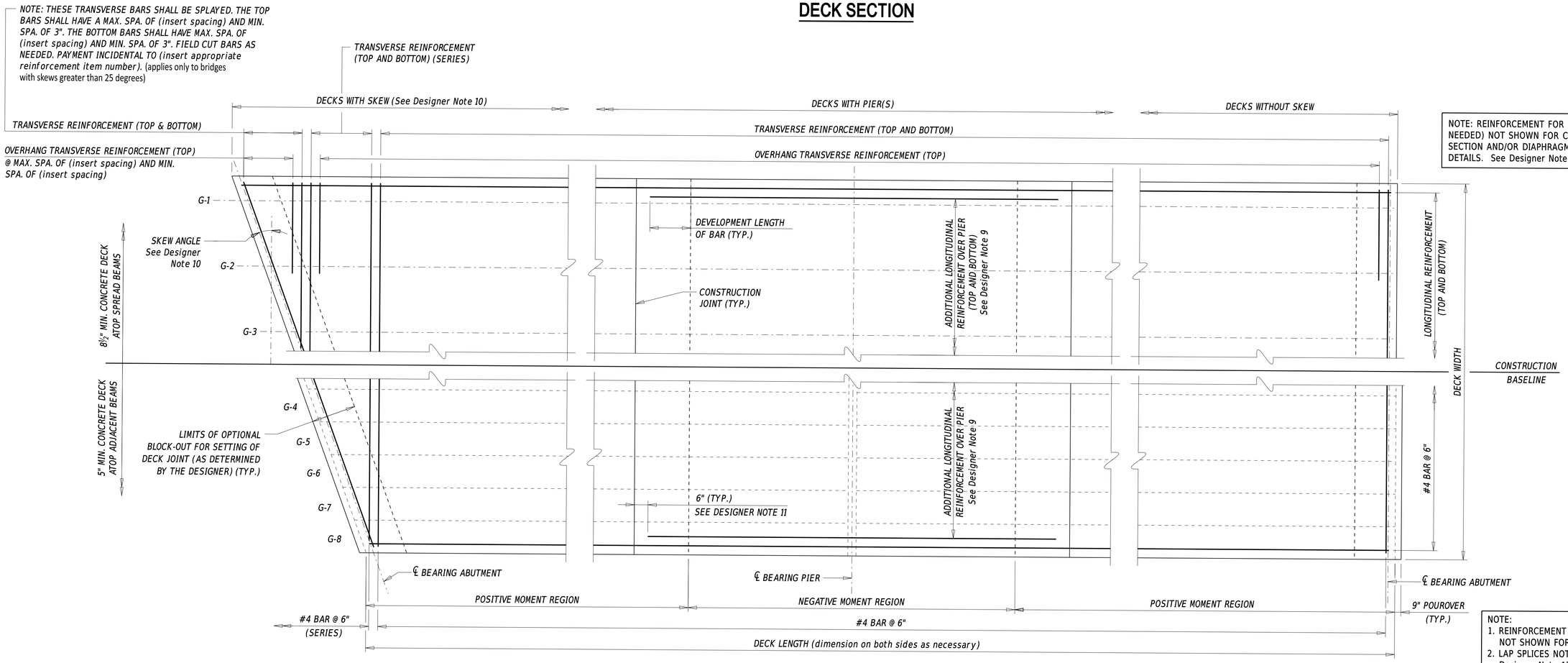

NOTE: REINFORCEMENT FOR DECK END HAUNCH (IF NEEDED) NOT SHOWN FOR CLARITY. REFER TO TYPICAL SECTION AND/OR DIAPHRAGM SECTIONS FOR FURTHER DETAILS. See Designer Note 14.

DECK PLAN

NOTE:
1. REINFORCEMENT FOR BARRIERS CAST IN THE DECK NOT SHOWN FOR CLARITY - See Designer Note 12.
2. LAP SPLICES NOT SHOWN FOR CLARITY - See Designer Note 13.
3. ADDITIONAL REINFORCEMENT AT POUROVER NOT SHOWN FOR CLARITY - See Designer Note 15.
4. ADDITIONAL REINFORCEMENT AT PIER BETWEEN ENDS OF BEAMS NOT SHOWN FOR CLARITY.

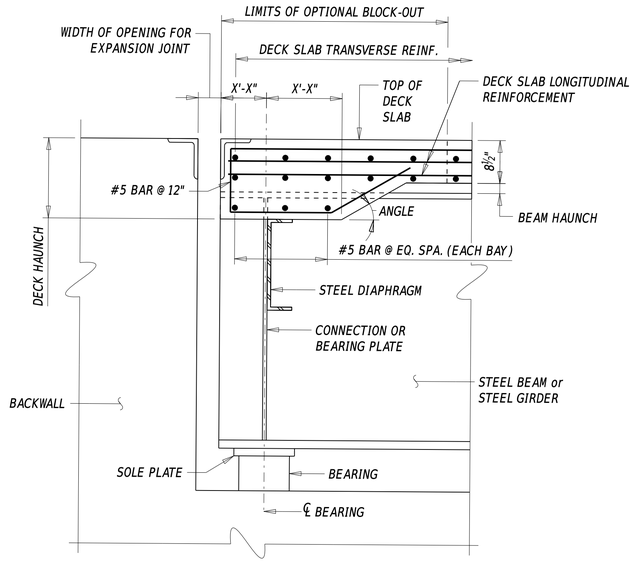

NOTE: SHEAR STUDS, BASE PLATE, AND PEDESTALS NOT SHOWN FOR CLARITY.

TYPICAL SECTION (TYPE V ABUTMENT)

(STEEL BEAMS or STEEL GIRDERS)

See Designer Note 14

ILLUSTRATED FOR USE ON REHABILITATION PROJECTS. NOT PREFERRED FOR NEW CONSTRUCTION.

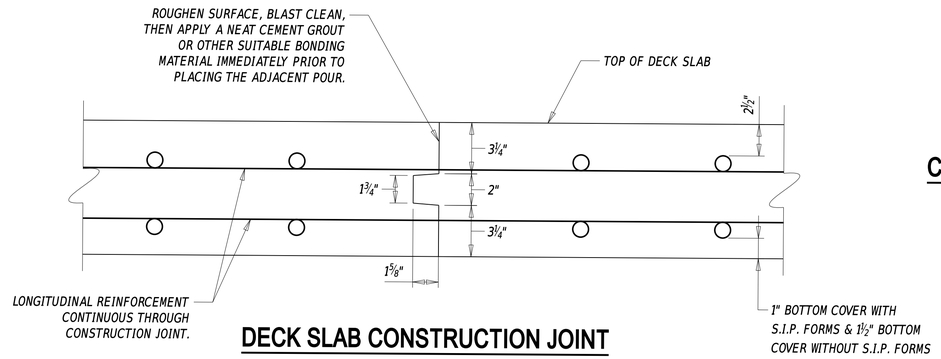

DECK SLAB CONSTRUCTION JOINT

NOTE: TYPICAL FOR 8½" DECK SLABS. INCREASE BOTH 3¼" DIMENSIONS EQUALLY FOR THICKER SLABS.

See Designer Note 11

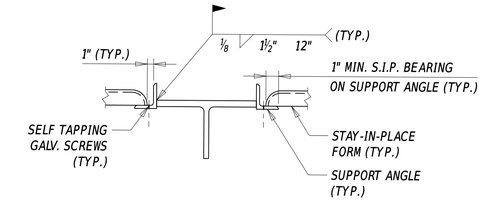

COMPRESSION FLANGE STAY-IN-PLACE FORM CONNECTION DETAIL

(STEEL BEAM or STEEL GIRDER)

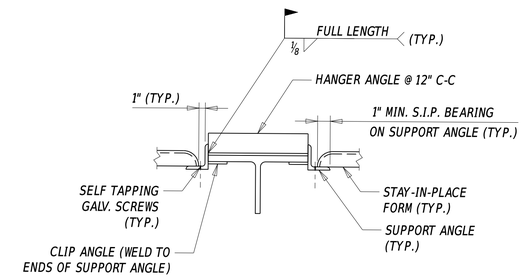

NOTE: DO NOT WELD DIRECTLY TO THE TOP FLANGE IN THE TENSION ZONE.

TENSION FLANGE STAY-IN-PLACE FORM CONNECTION DETAIL

(STEEL BEAM or STEEL GIRDER)

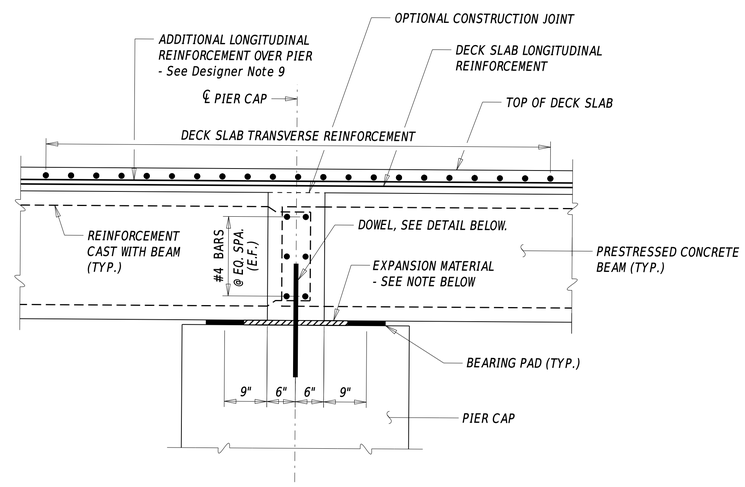

NOTE: THE QUANTITY, LOCATION, AND SPACING OF DOWELS AS DETERMINED BY DESIGNER.

DECK SLAB DETAIL AT PIER

(ADJACENT BOX BEAMS)

See Designer Note 16

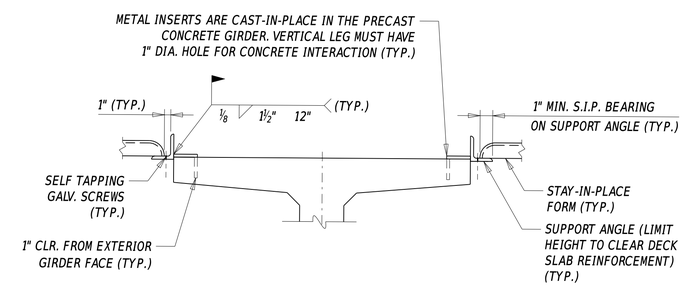

FLANGE STAY-IN-PLACE FORM CONNECTION DETAIL

(PCEF CONCRETE GIRDER SHOWN BUT SAME DETAILS MAY BE USED AT SPREAD BOX BEAMS)

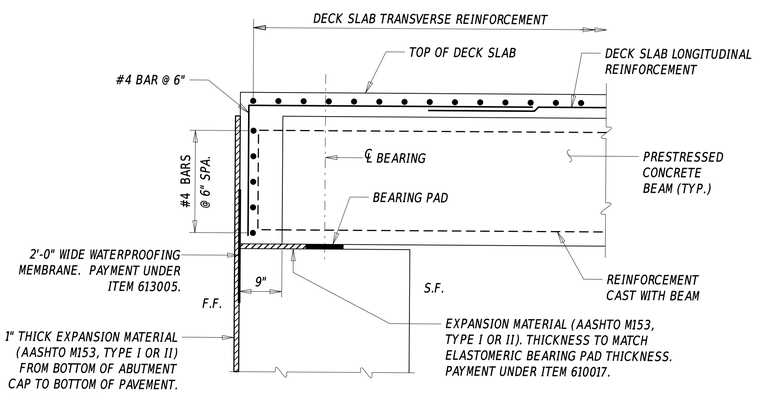

THIS EXAMPLE DEPICTS ABUTMENT TYPE IIA OR TYPE IIB WITH DECK SLAB POUROVER DETAILS AS DESCRIBED IN BDM 103.6.2.

DECK SLAB POUROVER DETAIL

(ADJACENT BOX BEAMS)

See Designer Note 15

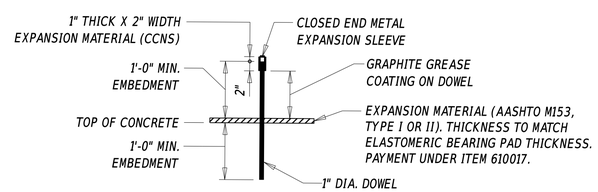

DOWEL DETAIL FOR DECK SLAB AT PIER

(ADJACENT BEAMS OR PCEF GIRDERS @ FIXED BEARING ONLY)

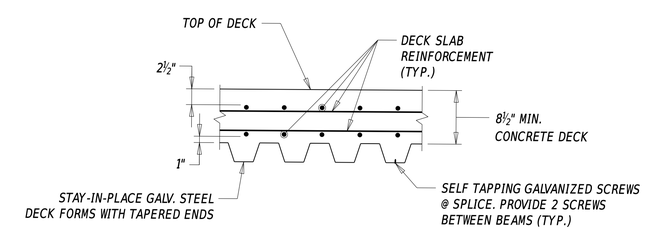

STAY-IN-PLACE STEEL FORM DETAIL

See Designer Note 2 and 17

F.F. = FILL FACE
S.F. = STREAM FACE

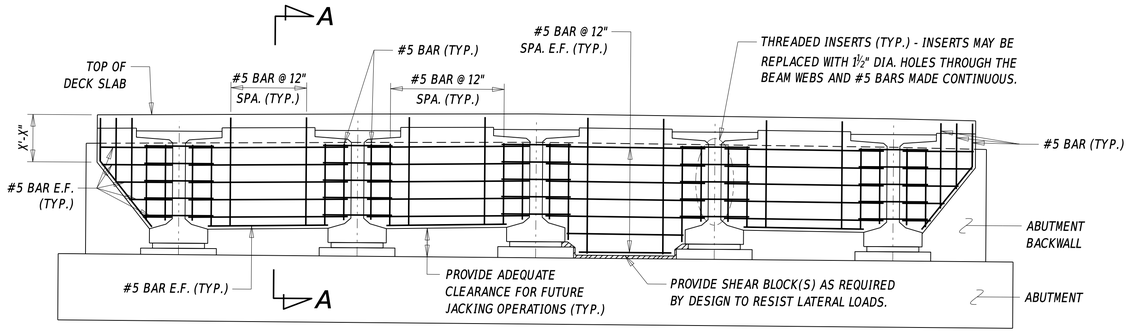

END DIAPHRAGM ELEVATION

NOTE: EXAMPLE UTILIZING PCEF CONCRETE GIRDERS

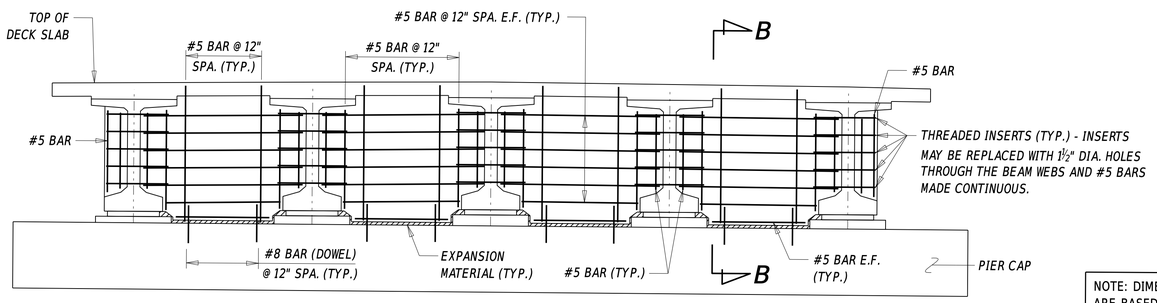

PIER DIAPHRAGM ELEVATION

NOTE: EXAMPLE UTILIZING PCEF CONCRETE GIRDERS

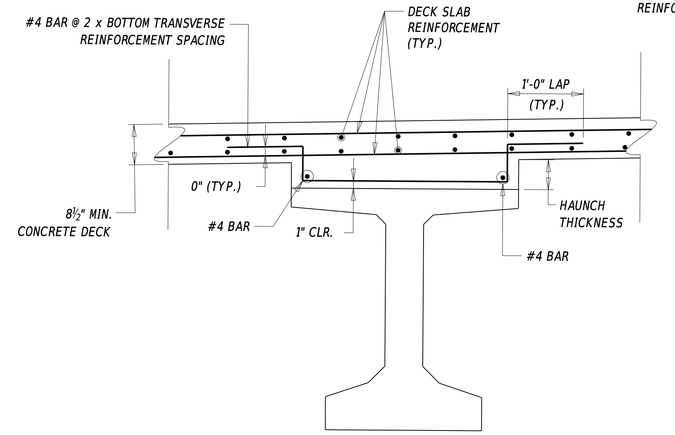

PCEF CONCRETE GIRDERS

HAUNCH REINFORCEMENT IS REQUIRED WHEN HAUNCH THICKNESS IS 5" OR GREATER AT ANY POINT ACROSS THE WIDTH OF HAUNCH IF S.I.P. FORMS ARE USED. IF S.I.P. FORMS ARE NOT USED, THE HAUNCH REINFORCEMENT REQUIREMENT IS LOWERED TO THICKNESS OF 3" OR GREATER.

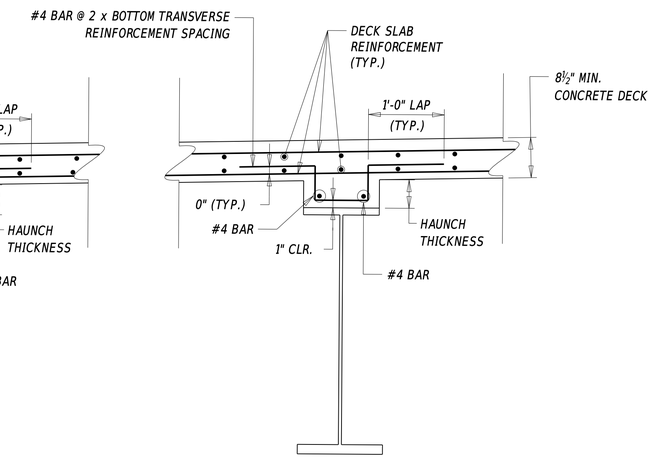

STEEL BEAM AND STEEL GIRDERS

HAUNCH REINFORCEMENT IS REQUIRED WHEN HAUNCH THICKNESS IS 3" OR GREATER AT ANY POINT ACROSS THE WIDTH OF HAUNCH. THIS APPLIES TO BOTH CASES WHERE S.I.P. FORMS ARE USED OR NOT USED.

HAUNCH REINFORCEMENT DETAILS

NOTE: S.I.P FORMS & INTERFACE SHEAR REINFORCEMENT NOT SHOWN FOR CLARITY

NOTE: DIMENSIONS PROVIDED IN PIER DIAPHRAGM SECTIONS ARE BASED ON ZERO SKEW. THE DIMENSIONS WILL LIKELY INCREASE WITH SKEW. EXPANSION JOINT DETAILS AND P/S STRANDS EXTENDING INTO DIAPHRAGM IN THESE SECTIONS NOT SHOWN FOR CLARITY.

NOTE: REFER DECK EXTENSION DETAIL ON DETAIL 325.03.

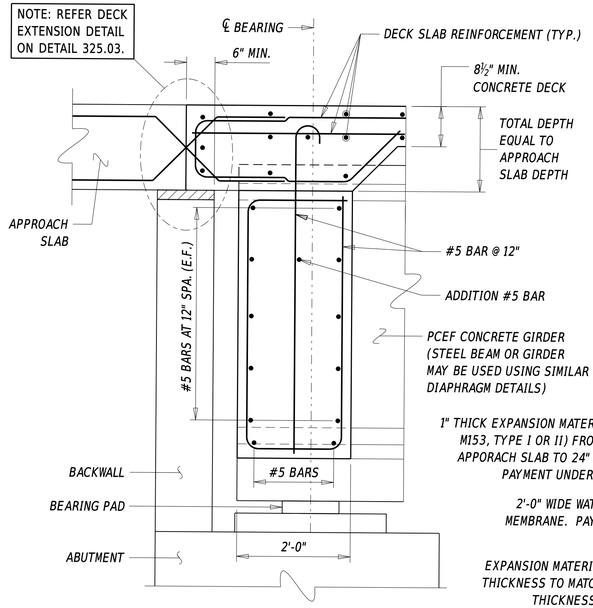

END DIAPHRAGM SECTION

(ABUTMENT TYPE IIIA OR IIIB - SECTION A-A)

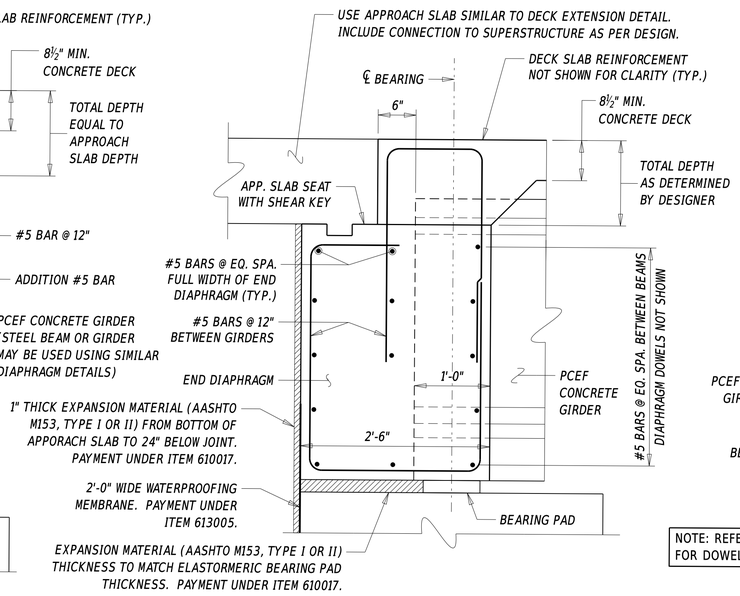

END DIAPHRAGM SECTION

(SEMI-INTEGRAL ABUTMENT TYPE IIC)

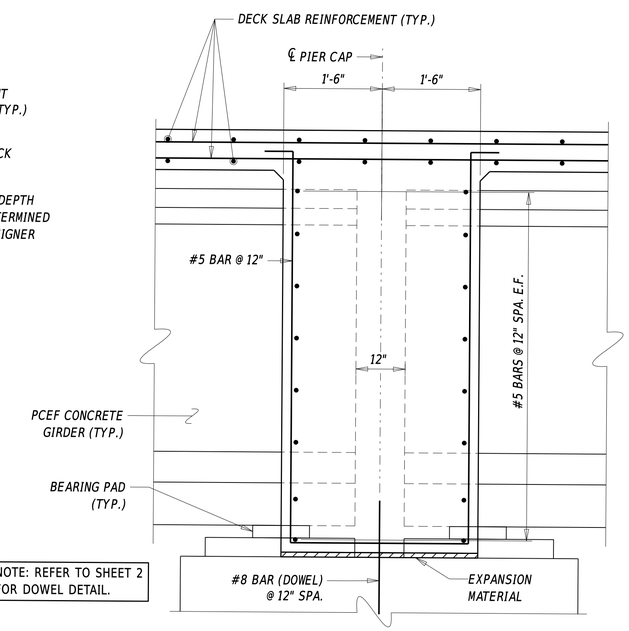

NOTE: REFER TO SHEET 2 FOR DOWEL DETAIL.

PIER DIAPHRAGM SECTION

(FIXED BEARINGS - SECTION B-B)

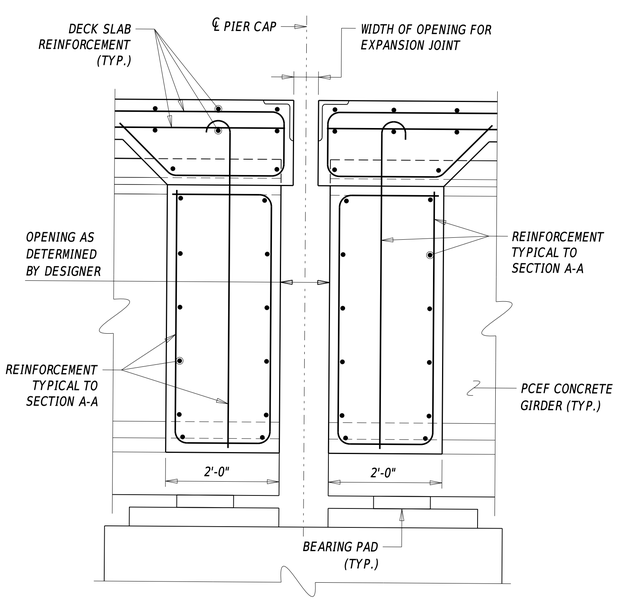

PIER DIAPHRAGM SECTION

(EXPANSION BEARINGS - SECTION B-B)

DELDOT BRIDGE DESIGN SECTION

DELAWARE DEPARTMENT OF TRANSPORTATION
BRIDGE DESIGN MANUAL

CONCRETE DECK DETAILS

NOT TO SCALE

ISSUE DATE	
10/01/2015	
2022	

DETAIL No. 325.01

SHEET No. 3 of 4

PROJECT SPECIFIC NOTES *(See Designer Note 1)*

1. (phased construction only) *MECHANICAL COUPLERS SHALL BE USED AT LOCATIONS WHERE USE OF LAP SPLICES ARE NOT FEASIBLE. MECHANICAL COUPLERS SHALL BE EPOXY COATED. PAYMENT FOR COUPLERS SHALL BE INCIDENTAL TO THE APPROPRIATE BAR REINFORCEMENT ITEM.*
2. (phased construction only) *REINFORCEMENT CONNECTED VIA MECHANICAL COUPLERS MAY NEED TO BE FIELD CUT TO ALLOW FOR PROPER ROOM FOR THE COUPLER. PAYMENT FOR SUCH WORK SHALL BE INCIDENTAL TO THE APPROPRIATE BAR REINFORCEMENT ITEM.*
3. (phased construction only) *THE CONTRACTOR HAS THE OPTION TO DRILL IN LIEU OF USING MECHANICAL COUPLERS. #(insert reinforcing bar number) MUST BE USED. THE BARS MUST BE EMBEDDED INTO THE DECK A MINIMUM OF (insert length) EACH WAY. ANY DRILLING MUST NOT COME INTO CONTACT WITH THE EXISTING REINFORCEMENT. ANY DAMAGE TO THE EXISTING REINFORCEMENT MUST BE REPAIRED AT THE CONTRACTOR'S EXPENSE TO THE SATISFACTION OF THE ENGINEER.*

STAY-IN-PLACE FORM NOTES *(See Designer Note 1 and 2)*

1. *THESE FORMS SHALL BE VERTICALLY ADJUSTED TO ATTAIN LINE AND GRADE REQUIRED ON THE PLANS.*
2. *THE CONTRACTOR SHALL SUBMIT SHOP DRAWINGS FOR APPROVAL. METAL FORMS MUST BE GALVANIZED AND MORTAR TIGHT. STEEL METAL SCREWS MUST BE NON-CORROSIVE. SELF TAPPING SCREWS SHALL BE INSTALLED AT THE SIDE LAP OF THE SHEETS AT MID-SPAN SUPPORTS. ALL ANGLES, WELDS, AND INSERTS MUST BE DESIGNED BY THE CONTRACTOR.*
3. *ALL MATERIALS AND LABOR NEEDED FOR FORMS SHALL BE INCIDENTAL TO ITEM 610017 - P.C.C. MASONRY, SUPERSTRUCTURE, CLASS D.*
4. (for multi-span steel beams or steel girders only) *TENSION FLANGE DETAIL IS IN THE AREA ALONG THE BEAM BETWEEN SPLICES.*
5. (for multi-span steel beams or steel girders only) *WELDING TO STEEL BEAM FLANGES IN TENSION ZONE IS STRICTLY PROHIBITED.*

DESIGNER NOTES

1. 'PROJECT SPECIFIC NOTES' AND 'STAY-IN-PLACE FORM NOTES' ARE REQUIRED TO BE SHOWN ON THE PLAN SETS WHEN APPLICABLE.
2. UNDER 'STAY-IN-PLACE FORM NOTES', IF ECONOMICAL FOR REHABILITATION PROJECTS OR WHEN DEAD LOAD IS A CONTROL, ADD A NOTE THAT METAL FORMS WITH BLOCKED OUT VALLEYS MAY BE USED.
3. UNDER 'DECK SECTION', A TYPICAL DECK THICKNESS OF 8½" OVER SPREAD BEAMS IS SHOWN. THE ALLOWABLE RANGE AS PER SECTION 106.4.2.2 IS 8½" TO 10" THICK. NOTE THAT THE ½" THICK INTEGRAL SACRIFICIAL WEARING SURFACE IS INCLUDED IN THE ALLOWABLE RANGE.
4. UNDER 'DECK SECTION', THE EXAMPLE BARRIER USED ON DECK OVER SPREAD BEAMS IS A C.I.P. SINGLE SLOPE BARRIER. THE EXAMPLE BARRIER USED ON DECK OVER ADJACENT BEAMS IS A C.I.P. VERTICAL FACE BARRIER, TYPICALLY WITH AESTHETIC RUSTICATION ON BOTH FACES OF THE BARRIER. REFER TO DETAIL NO. 325.02 - BRIDGE RAILING DETAILS AND SECTION 106.5 FOR MORE INFORMATION ON BRIDGE BARRIERS AND RAILINGS.
5. UNDER 'DECK SECTION', IF REQUIRED, THE LIMITS OF ACRYLIC PROTECTIVE COATING FOR CONCRETE MUST BE SHOWN ON THE PLANS IN ACCORDANCE WITH SECTION 106.5.1.
6. UNDER 'DECK SECTION', S.I.P FORMS ARE NOT SHOWN FOR CLARITY, BUT IT IS THE DEPARTMENT'S PREFERENCE TO UTILIZE USE OF S.I.P. FORMS FOR C.I.P. DECKS. REFER TO SECTION 106.4.2.
7. UNDER 'DECK SECTION' AND 'DECK PLAN', FOR SPREAD BEAMS, IT IS ASSUMED THAT THE REINFORCEMENT UTILIZES THE EMPIRICAL DESIGN IN ACCORDANCE WITH A9.7.2 WHICH TYPICALLY CONSIST OF #5 BARS AT 12" SPACING. NOTE THAT THE AASHTO CRITERIA TO QUALIFY THE USE OF EMPIRICAL DESIGN MUST BE MET.
8. UNDER 'DECK SECTION' AND 'DECK PLAN', FOR ADJACENT BEAMS, THE REINFORCEMENT USED IS #4 AT 6" FOR A SINGLE MAT IN EACH DIRECTION IN ACCORDANCE WITH SECTION 106.4.2.3.2.
9. UNDER 'DECK SECTION' AND 'DECK PLAN', ANY ADDITIONAL LONGITUDINAL REINFORCEMENT USED OVER PIER(S) TO RESIST NEGATIVE MOMENTS MUST MEET REQUIREMENTS OF A6.10.1.7 FOR STEEL BEAMS or STEEL GIRDERS AND APPROPRIATE SUBSECTIONS IN A5 FOR PRECAST PRESTRESSED CONCRETE BEAMS.
10. UNDER 'DECK PLAN', THE TRANSVERSE REINFORCEMENT LAYOUT AT THE SKEW IS SHOWN WITH ASSUMPTION THAT THE BRIDGE SKEW IS GREATER THAN 25 DEGREES. FOR BRIDGES WITH SKEW OF 25 DEGREES OR LESS, THE TRANSVERSE REINFORCEMENT LAYOUT MUST BE PLACED PARALLEL TO THE C-C BEARINGS. REFER TO SECTION 106.4.2.3.1.1. THIS APPLIES BOTH TO DECKS OVER SPREAD BEAMS AND ADJACENT BEAMS.
11. UNDER 'DECK PLAN', THE TRANSVERSE CONSTRUCTION JOINT ADJACENT TO NEGATIVE MOMENTS MUST BE LOCATED 6 INCHES OUTSIDE OF THE END OF THE ADDITIONAL LONGITUDINAL REINFORCEMENT OVER PIER(S) IN ACCORDANCE WITH SECTION 106.4.2.10. ALSO REFER TO 'DECK SLAB CONSTRUCTION JOINT' ON SHEET 2 OF THIS DETAIL, WHICH MUST BE SHOWN ON THE PLAN SET.
12. UNDER 'DECK PLAN', THE BARRIER REINFORCEMENTS TO BE CAST WITH THE DECK ARE NOT SHOWN FOR CLARITY, BUT MUST BE SHOWN ON THE PLANS.
13. UNDER 'DECK PLAN', IF ANY LAP SPLICING ARE NEEDED, THE MINIMUM LENGTH OF THE LAP SPLICE FOR EACH BAR SIZE MUST BE SHOWN ON THE DECK PLAN.
14. UNDER 'TYPICAL SECTION (TYPE V ABUTMENT)', THIS DETAIL IS ONLY FOR EXISTING STEEL BEAMS OR STEEL GIRDERS UTILIZING EXPANSION JOINTS BETWEEN ABUTMENT BACKWALL AND END OF DECK. THE END DECK HAUNCH MUST REST ATOP THE END DIAPHRAGMS. THE END DIAPHRAGM SHOWN IS A C-CHANNEL, BUT OTHER END DIAPHRAGM TYPES MAY BE CONSIDERED. THE DIMENSIONS OF THE DECK END HAUNCH VARIES AND MUST BE DETERMINED BY THE DESIGNER ON A CASE-BY-CASE BASIS.
15. UNDER 'DECK SLAB POUROVER DETAIL', THIS DETAIL IS FOR ADJACENT BEAMS ONLY AND IS TYPICAL FOR MAJORITY OF THE PROJECTS THAT UTILIZES DECK SLAB POUROVER. THE DESIGNER MUST EVALUATE THE NEED TO MODIFY THE DETAILS IF NECESSARY. REFER TO DETAIL NO. 310.02 FOR MORE INFORMATION ON ABUTMENT DETAILS FOR THE DECK SLAB POUROVER.
16. UNDER 'DECK SLAB DETAIL AT PIER', THIS DETAIL IS TYPICALLY USED FOR MULTI-SPAN ADJACENT BEAM BRIDGES, BUT CAN BE USED WITH SPREAD BOX BEAMS. THE DESIGNER MUST EVALUATE THE NEED TO MODIFY THE DETAILS IF NECESSARY.
17. STAY-IN-PLACE FORM DETAILS MUST BE SHOWN FOR THE APPROPRIATE BEAM TYPE AND BRIDGE TYPE ON THE PLANS.
18. UNDER 'DECK SLAB POUR SEQUENCE', THE EXAMPLE SHOWN IS FOR A 2-SPAN BRIDGE. FOR MORE INFORMATION ON DECK POUR SEQUENCE, REFER TO SECTION 106.4.2.6 ANY PHASING WORK WILL REQUIRE ADDITIONAL INFORMATION AND MUST BE SHOWN ON THE PLANS.
19. UNDER 'FINISHED DECK ELEVATIONS', THE EXAMPLE SHOWN IS FOR A 2-SPAN BRIDGE ON CONSTANT GRADE. REFER TO SECTION 106.4.3 FOR MORE INFORMATION.
20. THE DESIGNER MUST CONSIDER THE AFFECTS OF CAMBER OF PRESTRESSED CONCRETE BEAMS WHEN SETTING THEIR DECK GRADES. THE DECKS OR HAUNCHES WILL TYPICALLY BE THICKER AT THE ENDS OF THE BEAM THAN AT THE CENTER OF SPAN.

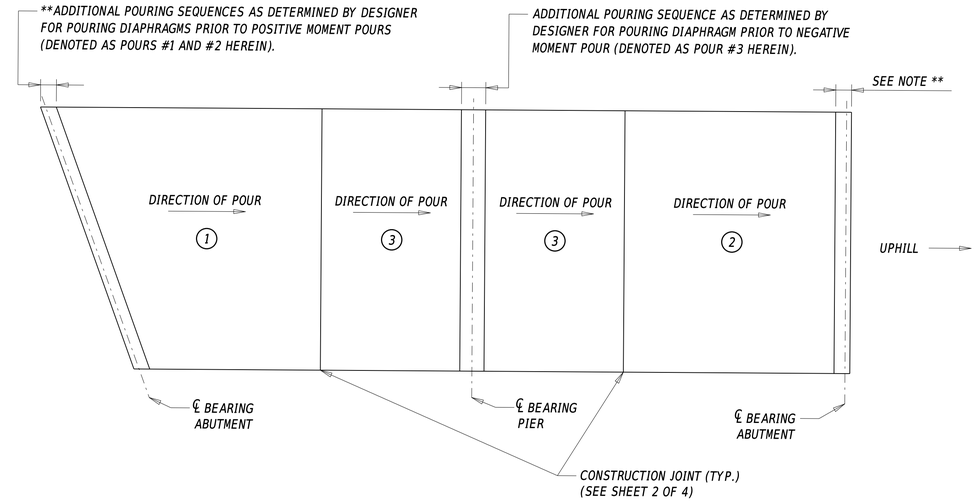

DECK SLAB POUR SEQUENCE

See Designer Note 18

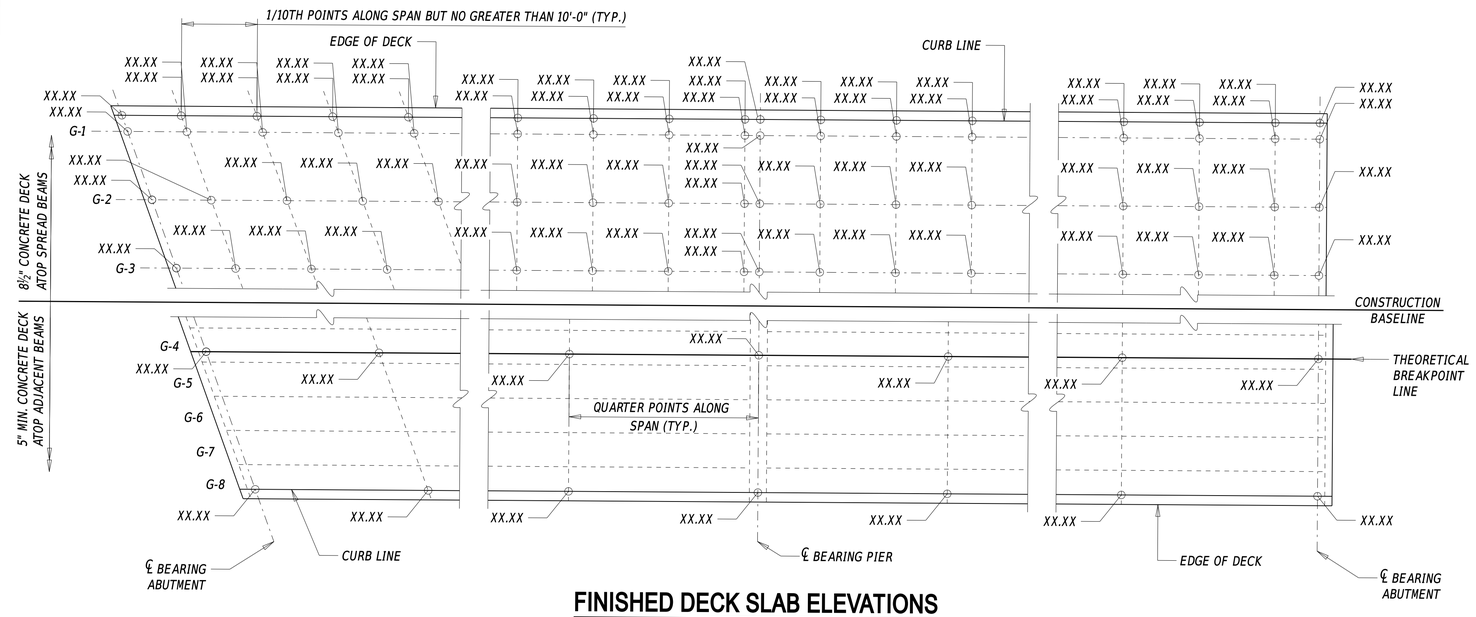

FINISHED DECK SLAB ELEVATIONS

See Designer Note 19 and 20

MASH TL-3

See Designer Note 2

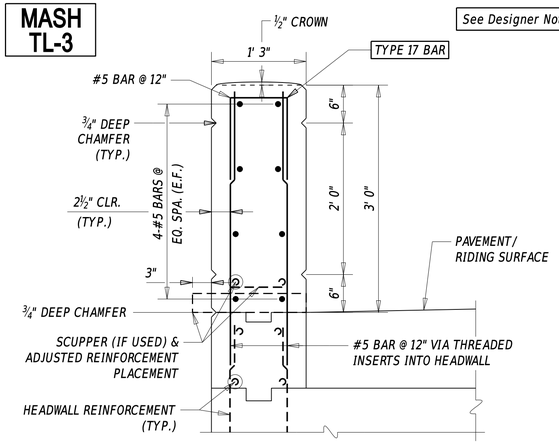

3'-0" VERTICAL FACE BARRIER SECTION

(EXAMPLE: BARRIER ATOP RIGID FRAME OR BOX CULVERT HEADWALL)

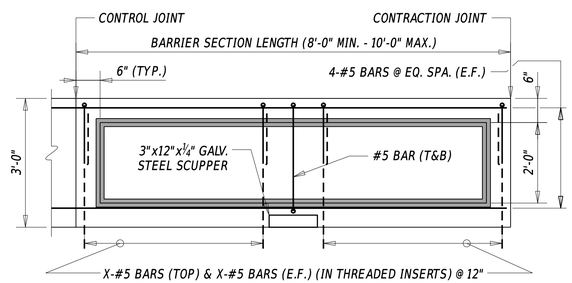

TYPICAL INTERIOR BARRIER WITH SCUPPER

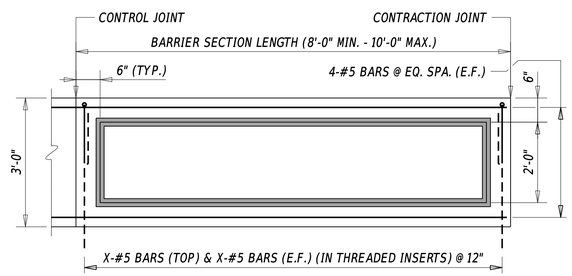

TYPICAL INTERIOR BARRIER

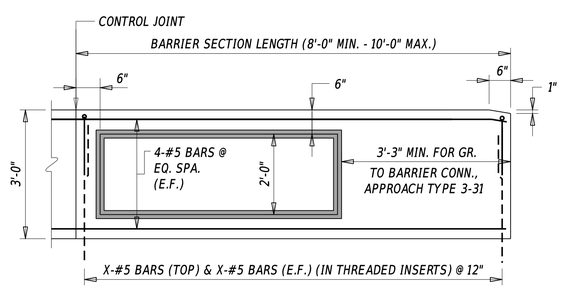

TYPICAL END BARRIER

FOR ATTACHMENT WITH GR. TO BARRIER CONN., APPROACH TYPE 3-31.
SEE ADDITIONAL END POST DETAILS ON SHEET 5.

MASH TL-4

See Designer Note 3

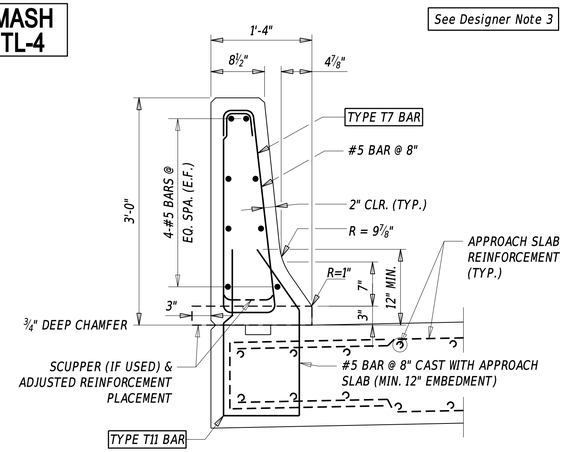

3'-0" F-SHAPE BARRIER SECTION

(EXAMPLE: BARRIER ATOP APPROACH SLAB)

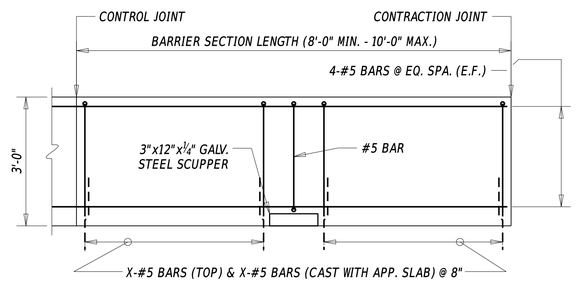

TYPICAL INTERIOR BARRIER WITH SCUPPER

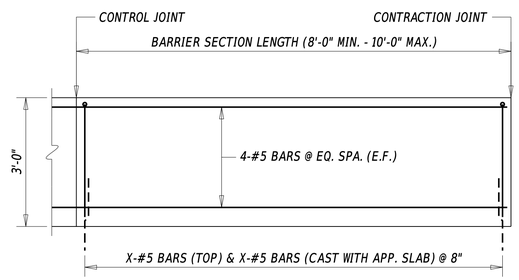

TYPICAL INTERIOR BARRIER

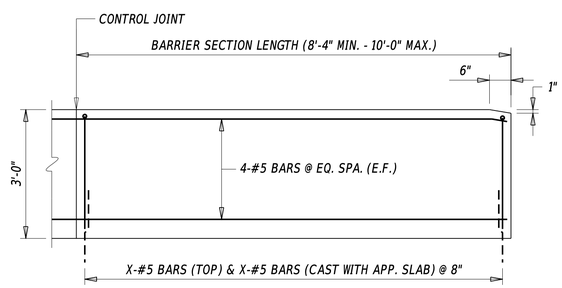

TYPICAL END BARRIER

FOR ATTACHMENT WITH GR. TO BARRIER CONN., APPROACH TYPE 3-31.
SEE ADDITIONAL END POST DETAILS ON SHEET 4.

MASH TL-5

See Designer Note 4

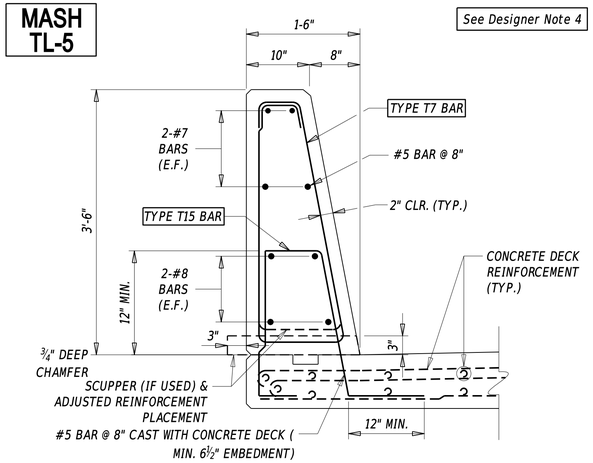

3'-6" SINGLE SLOPE BARRIER SECTION

(EXAMPLE: BARRIER ATOP 8½" CONCRETE DECK)

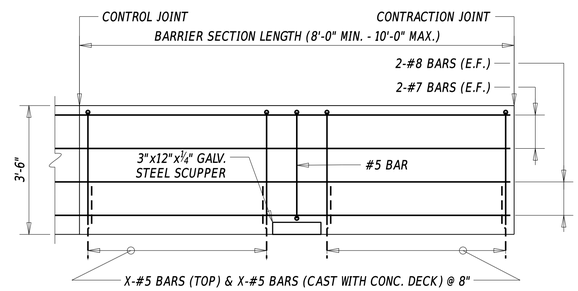

TYPICAL INTERIOR BARRIER WITH SCUPPER

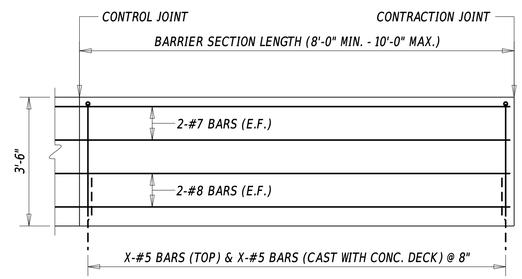

TYPICAL INTERIOR BARRIER

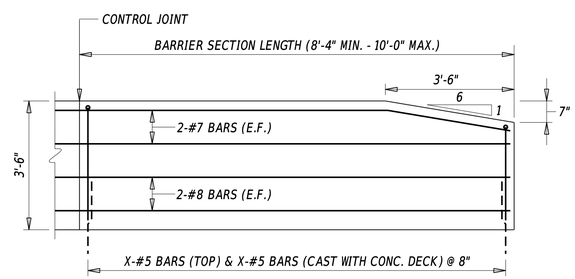

TYPICAL END BARRIER

FOR ATTACHMENT WITH GR. TO BARRIER CONN., APPROACH TYPE 3-31.
SEE ADDITIONAL END POST DETAILS ON SHEET 4.

MASH TL-5

NOTE: POTENTIAL SCUPPER NOT SHOWN FOR CLARITY.

See Designer Note 5

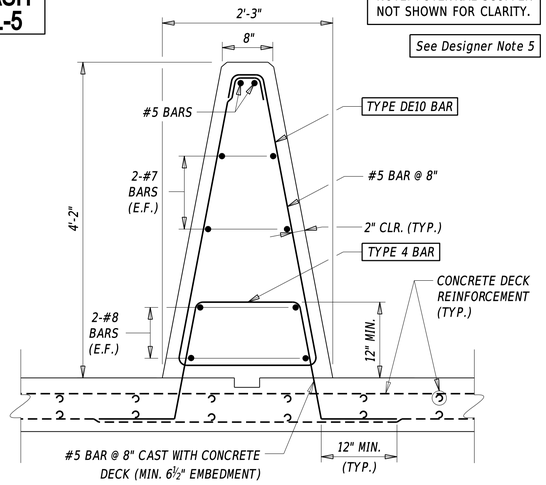

4'-2" SINGLE SLOPE MEDIAN BARRIER SECTION

(EXAMPLE: BARRIER ATOP 8½" CONCRETE DECK)

NOTE: TYPICALLY USED AS GLARE SCREEN MEDIAN BARRIER. THIS EXAMPLE ASSUMES CURB WILL BE CONSTRUCTED ON BOTH FACES OF THE BARRIER.

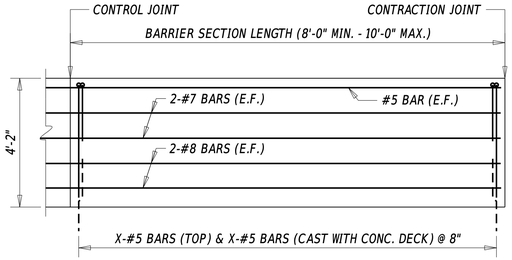

TYPICAL INTERIOR BARRIER

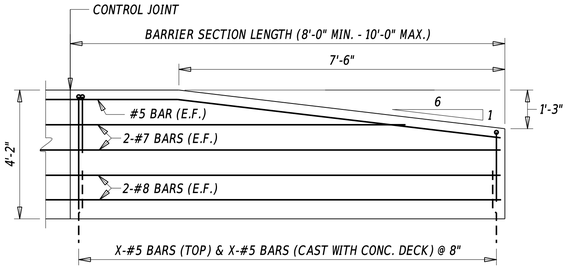

TYPICAL END BARRIER

FOR ATTACHMENT WITH GR. TO BARRIER CONN., APPROACH TYPE 3-31.
SEE ADDITIONAL END POST DETAILS ON SHEET 4.

MASH TL-5

See Designer Note 6

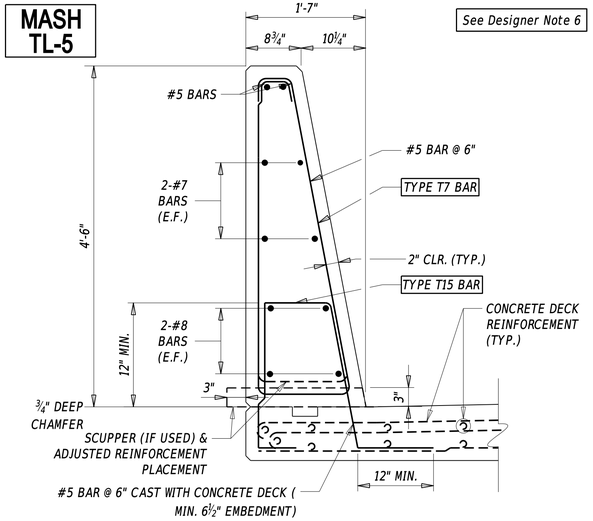

4'-6" SINGLE SLOPE BARRIER SECTION

(EXAMPLE: BARRIER ATOP 8½" CONCRETE DECK)

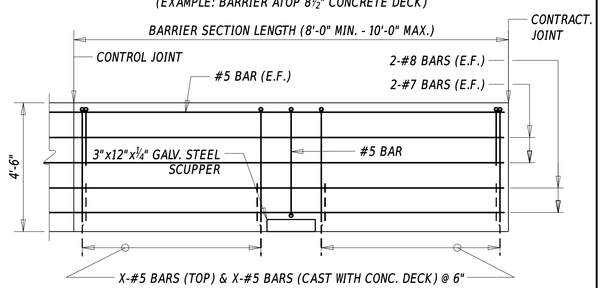

TYPICAL INTERIOR BARRIER WITH SCUPPER

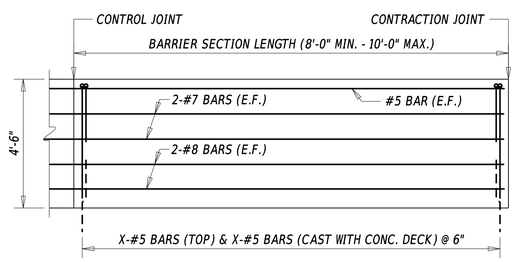

TYPICAL INTERIOR BARRIER

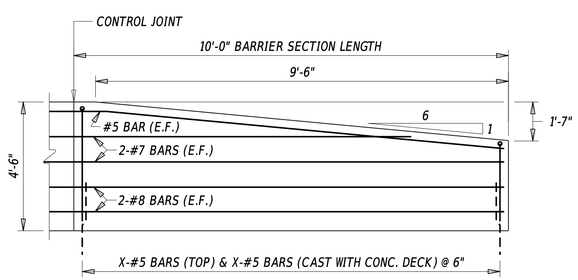

TYPICAL END BARRIER

FOR ATTACHMENT WITH GR. TO BARRIER CONN., APPROACH TYPE 3-31.
SEE ADDITIONAL END POST DETAILS ON SHEET 4.

MASH TL-4

NOTE: TYPICALLY FORM LINER IS CAST ONLY AT TRAFFIC FACE OF THE BARRIER AS SHOWN BELOW. HOWEVER, IN SOME CASES, FORM LINING THE BACKFACE ALONG WITH TRAFFIC SIDE OF THE BARRIER MAY BE WARRANTED. POTENTIAL SCUPPER NOT SHOWN FOR CLARITY. FORM-LINER PATTERN INSETS INTO THE FACE CANNOT BE DEEPER THAN 0.5" AND NO WIDER THAN 1".

See Designer Note 7

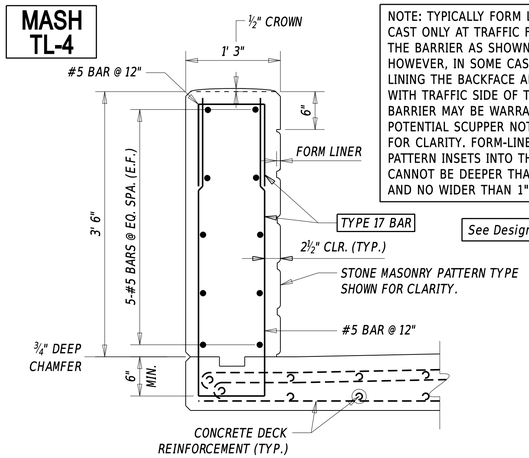

3'-6" FORM-LINER BARRIER SECTION

(EXAMPLE: TRAFFIC-SIDED FORM-LINER BARRIER ATOP 8½" CONCRETE DECK)

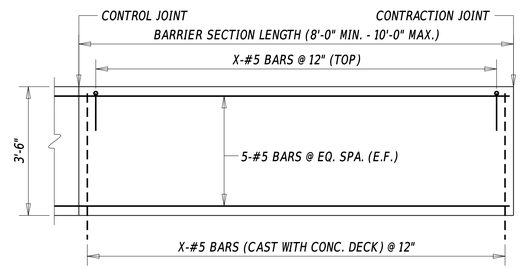

TYPICAL INTERIOR BARRIER

(FORM LINER FACE NOT SHOWN FOR CLARITY)

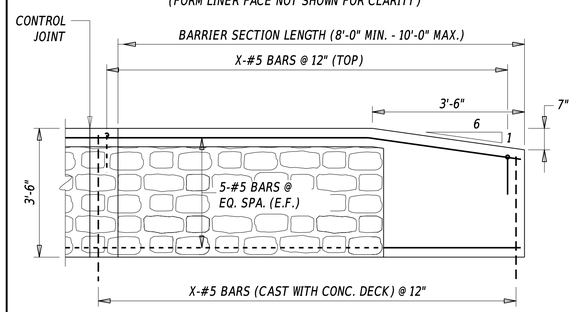

TYPICAL END BARRIER

FOR ATTACHMENT WITH GR. TO BARRIER CONN., APPROACH TYPE 3-31

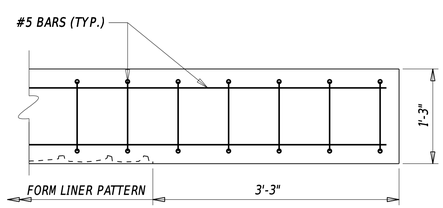

TYPICAL END BARRIER (PLAN VIEW)

FOR ATTACHMENT WITH GR. TO BARRIER CONN., APPROACH TYPE 3-31.
SEE ADDITIONAL END POST DETAILS ON SHEET 5.

MASH TL-2

NOTE: THE PARAPET SECTION SHOWN CAN BE SUBSITUTED FOR THE 2 STRAND TUBE RAIL PARAPET, THE 3 STRAND TUBE RAIL PARAPET OR THE 3'-6" FORM-LINER SECTION. ALL APPLICATIONS PLACED BEHIND AN 8" CURB ARE ONLY TO BE CONSIDERED A TL-2 APPLICATION.

See Designer Note 8

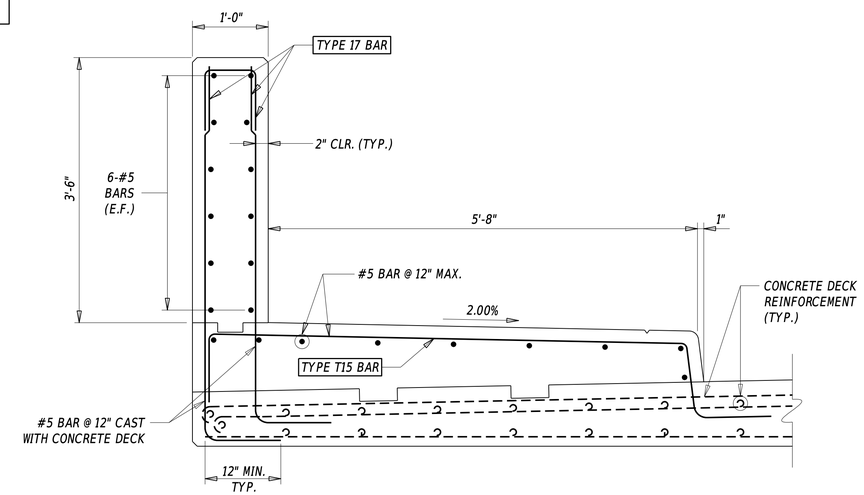

SIDEWALK WITH 3'-6" PARAPET SECTION

(EXAMPLE: BARRIER ATOP 8½" CONCRETE DECK)

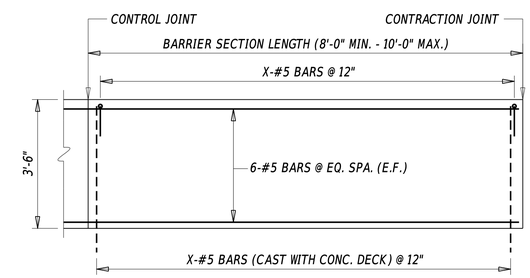

TYPICAL INTERIOR BARRIER

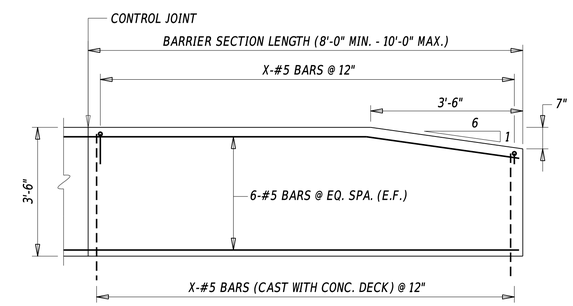

TYPICAL END BARRIER

FOR ATTACHMENT WITH GR. TO BARRIER CONN., APPROACH TYPE 3-31.
SEE ADDITIONAL END POST DETAILS ON SHEET 5.

MASH TL-4

See Designer Note 9

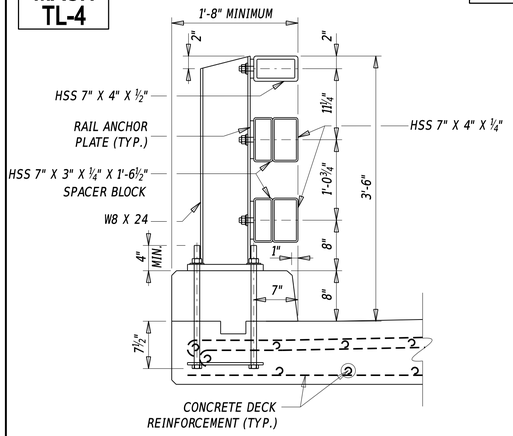

3 STRAND TUBE RAIL PARAPET SECTION

(EXAMPLE: BARRIER ATOP 10" CONCRETE DECK)

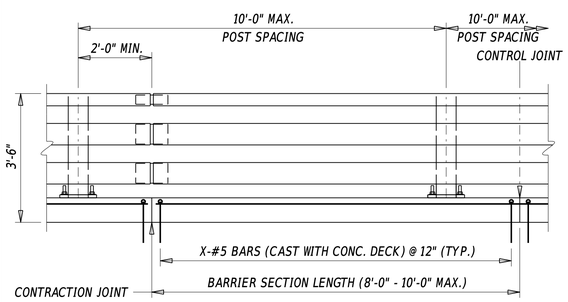

TYPICAL INTERIOR BARRIER

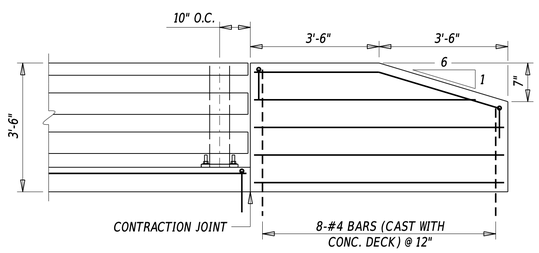

TYPICAL END BARRIER

FOR ATTACHMENT WITH GR. TO BARRIER CONN., APPROACH TYPE 3-31.
SEE ADDITIONAL END POST DETAILS ON SHEET 5.

MASH TL-4

See Designer Note 10

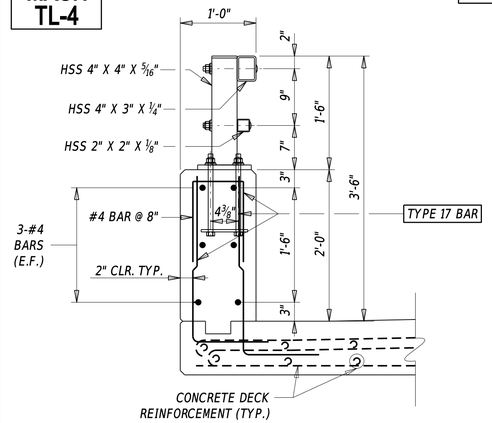

2 STRAND TUBE RAIL PARAPET SECTION

(EXAMPLE: BARRIER ATOP 8½" CONCRETE DECK)

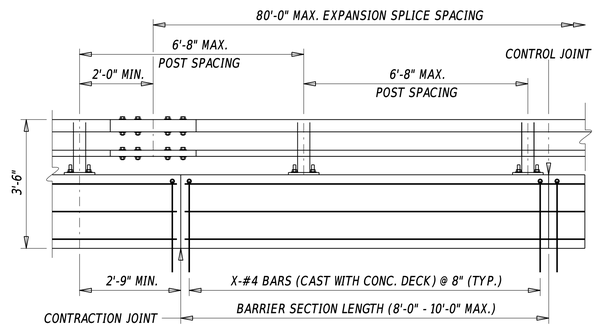

TYPICAL INTERIOR BARRIER

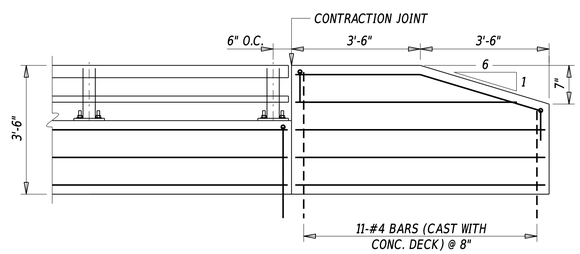

TYPICAL END BARRIER

FOR ATTACHMENT WITH GR. TO BARRIER CONN., APPROACH TYPE 3-31.
SEE ADDITIONAL END POST DETAILS ON SHEET 5.

DESIGNER NOTES

1. REFER TO SECTION 106.5 - 'BRIDGE BARRIERS AND RAILINGS' FOR MORE INFORMATION.
2. 3'-0" VERTICAL FACE BARRIERS ARE THE PREFERRED BARRIERS FOR BRIDGE PROJECTS REQUIRING MINIMUM USE OF TL-3 BARRIERS. THESE BARRIERS ARE TYPICALLY USED AT PROJECTS ON LOCAL ROADS UTILIZING BOX CULVERTS, RIGID FRAMES, AND ADJACENT BOX BEAMS.
3. 3'-0" F-SHAPE BARRIERS ARE TYPICALLY USED FOR BRIDGE PROJECTS ON ARTERIAL AND COLLECTOR ROADWAYS.
4. 3'-6" SINGLE SLOPE BARRIERS ARE USED FOR BRIDGE PROJECTS REQUIRING MINIMUM USE OF TL-5 BARRIERS ON FREEWAYS AND EXPRESSWAYS.
5. 4'-2" SINGLE SLOPE MEDIAN BARRIERS SHOULD BE USED TO REDUCE GLARE FROM OPPOSING TRAFFIC AT MEDIAN LOCATIONS NOT REQUIRING GAP PROTECTION IN ACCORDANCE WITH SECTION 103.3.
6. 4'-6" SINGLE SLOPE BARRIERS ARE FOR PROTECTION OF MEDIAN GAP OF PARALLEL STRUCTURES WITH GAPS OF 6 INCHES TO 15 FEET WIDE. REFER TO SECTION 103.3.3 FOR MORE INFORMATION.
7. 3'-6" FORM-LINER BARRIERS ARE TYPICALLY USED TO MEET AESTHETICS REQUIREMENTS. THIS TYPE OF BARRIER IS TYPICALLY USED IN NEW CASTLE COUNTY, BUT MAY BE USED IN KENT AND SUSSEX COUNTIES IF WARRANTED. THE DESIGNER SHOULD SPECIFY ON THE PLANS THE TYPE, FINISH AND COLOR OF THE FORM-LINER SURFACE. USE OF ANY FORM-LINER PATTERNS OTHER THAN STONE MASONRY OR BRICK PATTERNS MUST BE APPROVED BY THE BRIDGE DESIGN ENGINEER. FORM-LINER PATTERN INSETS INTO THE FACE CANNOT BE DEEPER THAN 0.5" AND NO WIDER THAN 1".
8. SIDEWALK WITH 3'-6" PARAPET APPLICATION MAY BE USED AS A TL-2 APPLICATION ALONG LOW-SPEED ROADWAYS WITH SIDEWALKS OR SHARED-USER PATHS WHERE THE HIGHER OF THE DESIGN SPEED OR THE POSTED SPEED IS BELOW 45 MPH. THE VERTICAL PARAPET BEHIND A VERTICAL CURB CAN BE SUBSTITUTED FOR THE 2 STRAND TUBE RAIL PARAPET, THE 3 STRAND TUBE RAIL PARAPET OR THE 3'-6" FORM-LINER BARRIER, HOWEVER, IN ALL CASES THE APPLICATION WILL ONLY BE CONSIDERED A TL-2 APPLICATION. WHERE PEDESTRIAN FACILITIES ARE PRESENT AND THE LOWER OF THE DESIGN SPEED OR POSTED SPEED IS ABOVE 45 MPH, A CRASHWORTHY TRAFFIC BARRIER MUST BE USED BETWEEN THE TRAVEL WAY AND SIDEWALK OR SHARED-USER PATH.
9. 3'-6" 3 STRAND TUBE RAIL PARAPETS ARE THE PREFERRED BARRIERS ON ROADWAYS WHERE ACCELERATED BRIDGE TECHNIQUES PRECLUDE THE USE OF A CONCRETE BARRIER. THE BRIDGE RAIL CAN ALSO BE USED AT LOCATIONS WHERE AN OPEN RAIL IS DESIRED FOR AESTHETIC PURPOSES. THIS BRIDGE RAIL REQUIRES A 10" MINIMUM END DECK THICKNESS FOR PROPER ANCHOR EMBEDMENT AND REINFORCEMENT COVER.
10. 3'-6" 2 STRAND TUBE RAIL PARAPETS ARE THE PREFERRED BARRIERS TO BE USED AS THE EXTERIOR PROTECTION WHERE THERE ARE SIDEWALK OR SHARED-USER PATHS PRESENT ON THE BRIDGE.
11. 4'-0" PEDESTRIAN RAILINGS (SHEETS 8 AND 9) ARE ANOTHER ALTERNATIVE TYPE OF EXTERIOR PROTECTION WHERE THERE ARE SIDEWALK OR SHARED-USER PATHS ON THE BRIDGE. THIS SYSTEM IS TYPICALLY USED ON BRIDGES OVER WATERWAY AND CAN ONLY BE USED IF THERE IS A CRASH-TESTED BARRIER BETWEEN THE TRAVEL WAY AND SIDEWALK/SHARED-USER PATHS.
12. BARRIER CONTROL JOINTS SHOULD BE USED WHERE THE LONGITUDINAL BARRIER REINFORCEMENT IS CONTINUOUS THROUGH THE JOINT.
13. BARRIER CONTRACTION JOINTS SHOULD BE USED WHERE THE LONGITUDINAL BARRIER REINFORCEMENT TERMINATES AT THE JOINT.
14. THE LONGITUDINAL BARRIER REINFORCEMENT SHOULD BE CONTINUOUS BETWEEN MINIMUM OF TWO, AND MAXIMUM OF THREE BARRIER SECTIONS
15. 'TYPICAL END BARRIER' SECTIONS AS SHOWN ON SHEETS 1 TO 5 ASSUMES BARRIER CONNECTION APPROACH TYPE 3-31 WILL BE ATTACHED TO THE END BARRIERS. IF THERE ARE NO CURRENT PLANS TO ATTACH THE APPROACH GUARDRAILS TO THE BARRIER, THE DESIGNER STILL SHOULD TAPER THE END BARRIERS IN AN EVENT THE GUARDRAIL WILL BE ATTACHED TO THE END BARRIER IN THE FUTURE.
16. ALL BARRIER END POSTS MUST FOLLOW THE APPROPRIATE SHAPE APPLICATION ON SHEETS 4 AND 5. UNLESS INDICATED OTHERWISE, THE REINFORCING IN THE END POSTS SHOULD MATCH THE APPROPRIATE APPLICATION OF SHEETS 1 TO 3.
17. BARRIER SECTIONS LENGTHS MUST BE MINIMUM OF 8'-0" AND MAXIMUM OF 10'-0". FOR SHORT SPANS (TYPICALLY BOX CULVERTS OR RIGID FRAMES), THE DESIGNER SHOULD CONSIDER USING GUARDRAIL OVER CULVERTS IF APPLICABLE, OR IF ONLY ONE OR TWO SECTIONS OF BARRIERS ARE REQUIRED ON EACH SIDE OF THE BRIDGE, THE 10'-0" MAXIMUM SECTION LENGTH REQUIREMENT MAY BE EXTENDED TO MAXIMUM SECTION LENGTH OF 11'-6".
18. ON BRIDGES 100' OR LONGER, PLACE REFLECTORS ON BARRIER IN ACCORDANCE WITH THE STANDARD SPECIFICATIONS AND THE DE-MUTCD. THE DESIGNER NEEDS TO SPECIFY A METHOD OF PAYMENT.

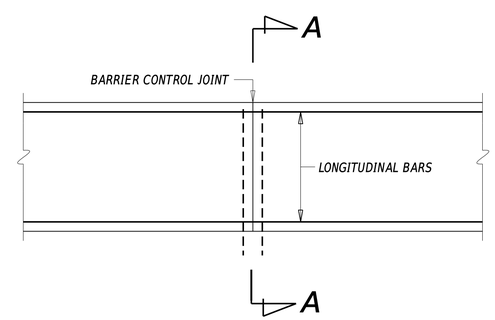

BARRIER CONTROL JOINT DETAIL (ELEVATION)

(REINFORCEMENT CONTINUOUS THROUGH JOINT)

NOTE: USE OF PARAFFIN COAT AT THE JOINT OR A ⅜" OPEN JOINT IS PERMITTED. BARRIER EXPANSION JOINT DETAIL SIMILAR TO BARRIER CONTRACTION JOINT DETAIL WITH OPENING TYPICALLY GREATER THAN 2 INCHES. REFER TO DETAIL NO. 340.01 FOR MORE INFORMATION.

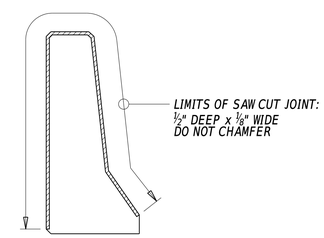

SECTION A-A

EXAMPLE SHOWN USING F-SHAPE BARRIER.
REINFORCEMENT NOT SHOWN FOR CLARITY.

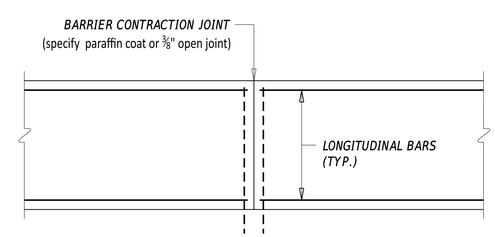

BARRIER CONTRACTION JOINT DETAIL

(REINFORCEMENT NOT CONTINUOUS THROUGH JOINT)

SINGLE SLOPE BARRIER END POST

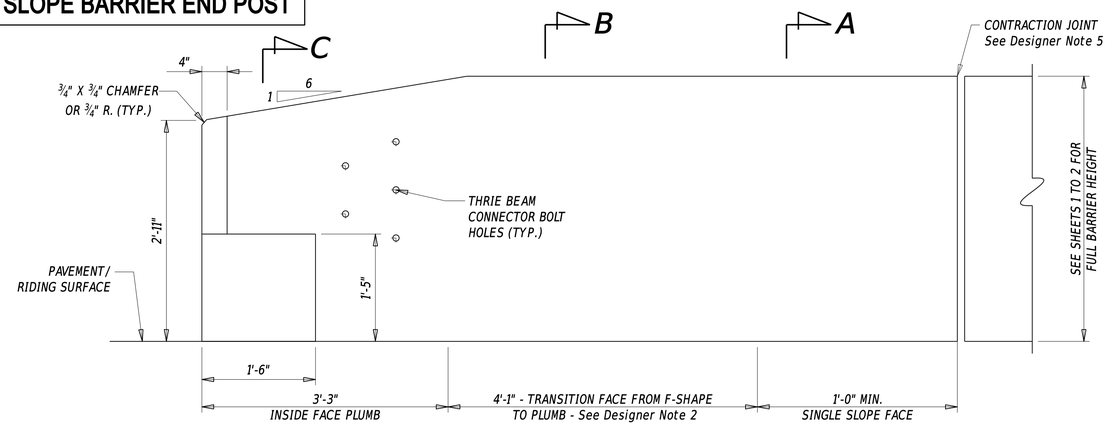

SINGLE SLOPE BARRIER END POST ELEVATION

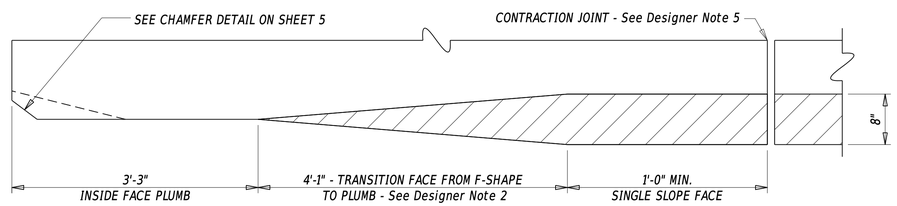

SINGLE SLOPE BARRIER END POST PLAN

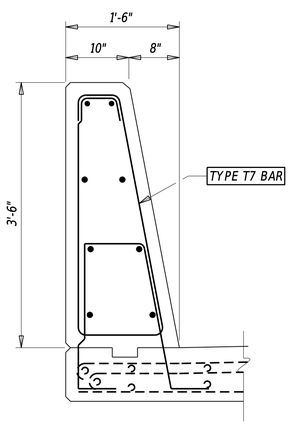

SECTION A-A

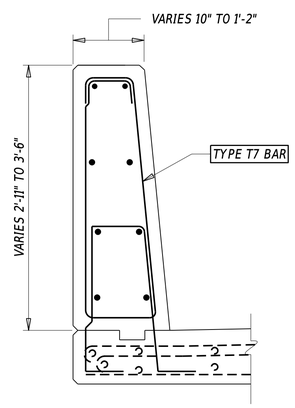

SECTION B-B

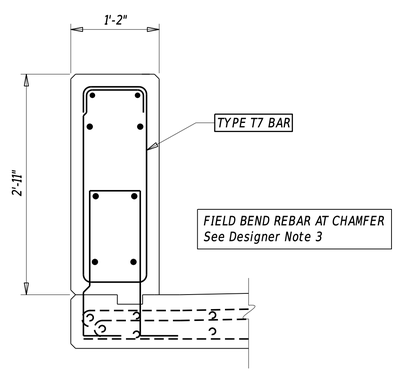

SECTION C-C

DESIGNER NOTES

1. THRIE BEAM TRAFFIC BARRIER NOT SHOWN FOR CLARITY. REFER TO DELDOT STANDARD CONSTRUCTION DETAIL B-9 FOR MORE INFORMATION.
2. VERTICAL HEIGHT TRANSITIONS WILL OCCUR AT A RATIO OF 6 HORIZONTAL TO 1 VERTICAL. THE INSIDE FACE OF THE BARRIER MUST REMAIN PLUMB 6" PAST THE THRIE BEAM CONNECTION END TERMINAL PLATE. AFTER THIS HORIZONTAL DISTANCE, THE BARRIER FACE MAY TRANSITION LATERALLY AT A RATE OF 10:1. THE VIEWS DEPICTED ARE FOR THE 42" SINGLE SLOPE BARRIER, HOWEVER, THESE TRANSITION RATES ALSO APPLY TO THE 50" SINGLE SLOPE MEDIAN BARRIER AND THE 54" SINGLE SLOPE BARRIER.
3. LONGITUDINAL REINFORCING SHALL BE FIELD BENT AROUND END CHAMFERS. VERTICAL REINFORCING SHALL BE SPACED TO PROVIDE A 2" CLEAR MINIMUM BETWEEN THE REINFORCING STEEL AND THE CONCRETE FACE. ADDITIONAL CHAMFER DETAILS SHOWN ON SHEET 5.
4. END POST REINFORCING SHALL MATCH SIZE AND SPACING SHOWN ON SHEETS 1 TO 2 OF THIS DETAIL.
5. REFER TO BARRIER CONTRACTION JOINT DETAIL ON SHEET 3 FOR ADDITIONAL JOINT INFORMATION.

F-SHAPE BARRIER END POST

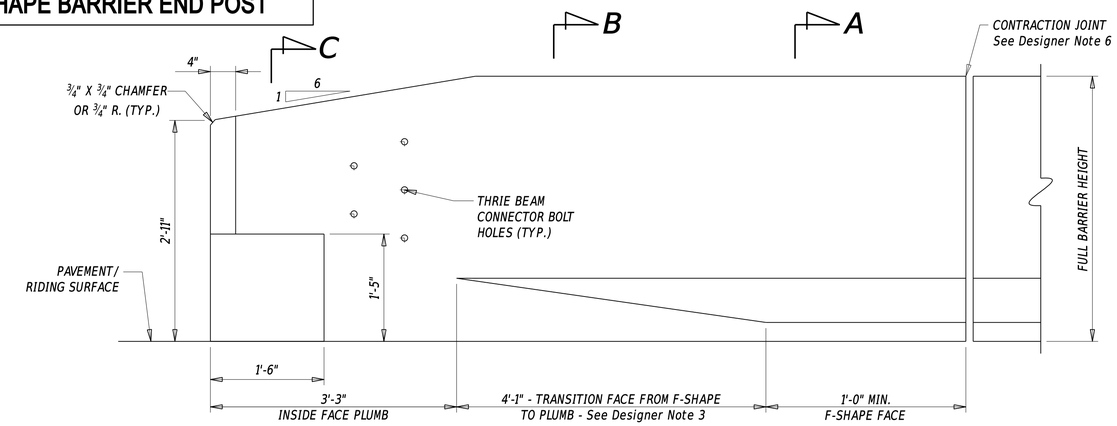

F-SHAPE BARRIER END POST ELEVATION

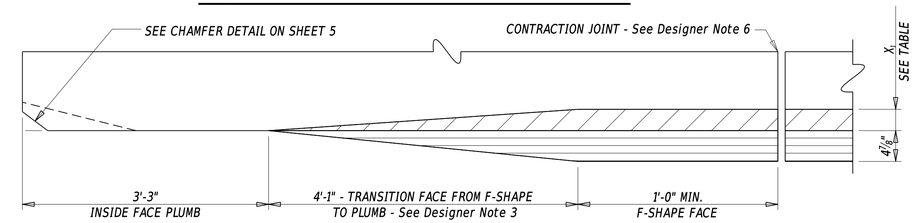

F-SHAPE BARRIER END POST PLAN

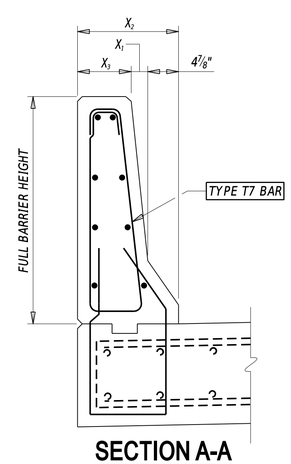

SECTION A-A

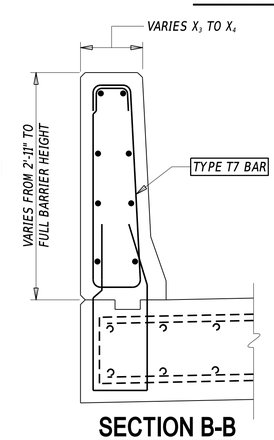

SECTION B-B

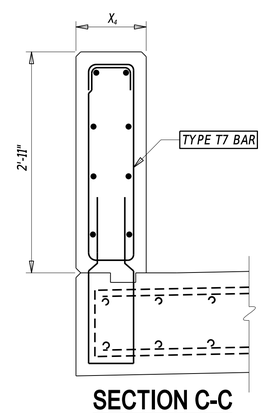

SECTION C-C

F-SHAPE HEIGHT	X_1	X_2	X_3	X_4
3'-0"	2 5/8"	1'-4"	8 1/2"	11 1/8"
3'-6"	3 3/8"	1'-5 1/4"	9"	1'-0 3/8"

Concerning 42' barrier, see Designer Note 2

FIELD BEND REBAR AT CHAMFER
See Designer Note 4

DESIGNER NOTES

1. THRIE BEAM TRAFFIC BARRIER NOT SHOWN FOR CLARITY. REFER TO DELDOT STANDARD CONSTRUCTION DETAIL B-9 FOR MORE INFORMATION.
2. DIMENSIONS FOR THE 3'-6" F-SHAPE ARE INCLUDED FOR LEGACY PURPOSES.
3. VERTICAL HEIGHT TRANSITIONS WILL OCCUR AT A RATIO OF 6 HORIZONTAL TO 1 VERTICAL. THE INSIDE FACE OF THE BARRIER MUST REMAIN PLUMB 6" PAST THE THRIE BEAM CONNECTION END TERMINAL PLATE. AFTER THIS HORIZONTAL DISTANCE, THE BARRIER FACE MAY TRANSITION LATERALLY AT A RATE OF 10:1.
4. LONGITUDINAL REINFORCING SHALL BE FIELD BENT AROUND END CHAMFERS. VERTICAL REINFORCING SHALL BE SPACED TO PROVIDE A 2" CLEAR MINIMUM BETWEEN THE REINFORCING STEEL AND THE CONCRETE FACE. ADDITIONAL CHAMFER DETAILS SHOWN ON SHEET 5.
5. END POST REINFORCING SHALL MATCH SIZE AND SPACING SHOWN ON SHEETS 1 TO 3 OF THIS DETAIL.
6. REFER TO BARRIER CONTRACTION JOINT DETAIL ON SHEET 3 FOR ADDITIONAL INFORMATION.

VERTICAL FACE BARRIER END POST

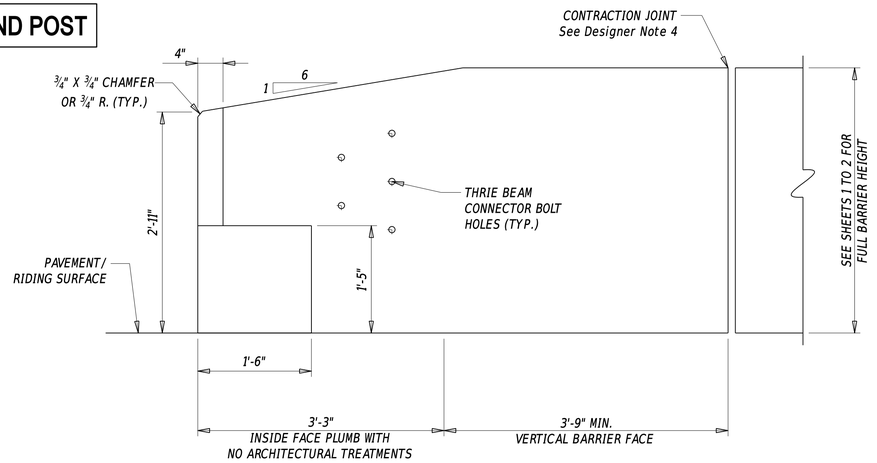

VERTICAL FACE BARRIER END POST ELEVATION

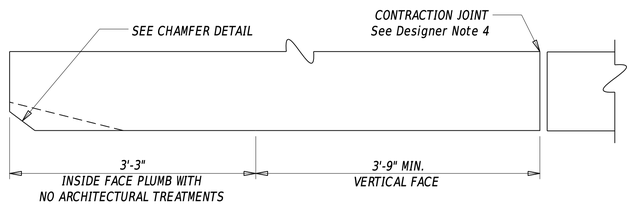

VERTICAL FACE BARRIER END POST PLAN

TUBE RAIL END POSTS

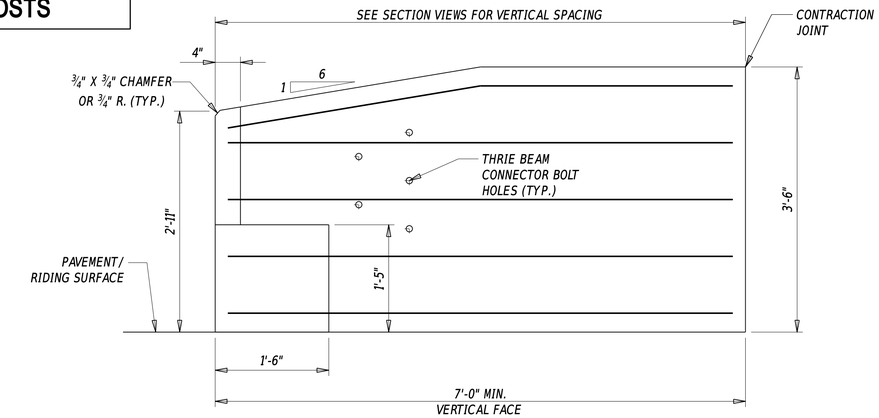

VERTICAL FACE BARRIER END POST ELEVATION

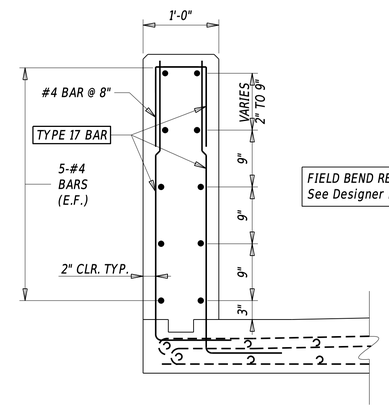

FIELD BEND REBAR AT CHAMFER
See Designer Note 3

2 STRAND TUBE RAIL BARRIER END POST SECTION

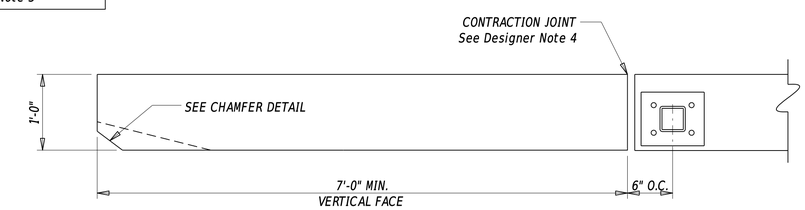

2 STRAND TUBE RAIL BARRIER END POST PLAN

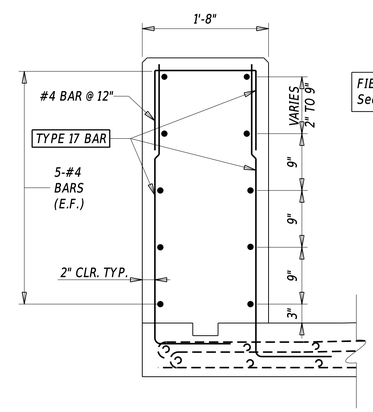

FIELD BEND REBAR AT CHAMFER
See Designer Note 3

3 STRAND TUBE RAIL BARRIER END POST SECTION

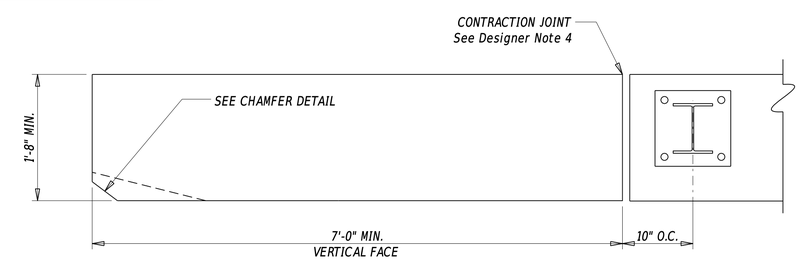

3 STRAND TUBE RAIL BARRIER END POST PLAN

DESIGNER NOTES

1. THRIE BEAM TRAFFIC BARRIER NOT SHOWN FOR CLARITY. REFER TO DELDOT STANDARD CONSTRUCTION DETAIL B-9 FOR MORE INFORMATION.
2. VERTICAL HEIGHT TRANSITIONS WILL OCCUR AT A RATIO OF 6 HORIZONTAL TO 1 VERTICAL.
3. LONGITUDINAL REINFORCING SHALL BE FIELD BENT AROUND END CHAMFERS. VERTICAL REINFORCING SHALL BE SPACED TO PROVIDE A 2" CLEAR MINIMUM BETWEEN THE REINFORCING STEEL AND THE CONCRETE FACE. ADDITIONAL CHAMFER DETAILS SHOWN ON THIS SHEET.
4. END POST REINFORCING SHALL MATCH SIZE AND SPACING SHOWN ON SHEETS 1 TO 2 OF THIS DETAIL.
5. REFER TO BARRIER CONTRACTION JOINT DETAIL ON SHEET 3 FOR ADDITIONAL INFORMATION.

TYPICAL END POST CHAMFER DETAILS

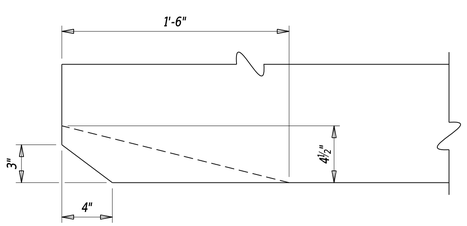

CHAMFER DETAIL

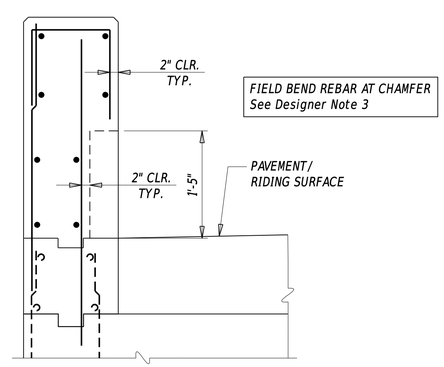

FIELD BEND REBAR AT CHAMFER
See Designer Note 3

VERTICAL REINFORCING DETAIL IN CHAMFER

DESIGNER NOTES

1. THRIE BEAM TRAFFIC BARRIER NOT SHOWN FOR CLARITY. REFER TO DELDOT STANDARD CONSTRUCTION DETAIL B-9 FOR MORE INFORMATION.
2. VERTICAL HEIGHT TRANSITIONS WILL OCCUR AT A RATIO OF 6 HORIZONTAL TO 1 VERTICAL.
3. LONGITUDINAL REINFORCING SHALL BE FIELD BENT AROUND END CHAMFERS. VERTICAL REINFORCING SHALL BE SPACED TO PROVIDE A 2" CLEAR MINIMUM BETWEEN THE REINFORCING STEEL AND THE CONCRETE FACE. ADDITIONAL CHAMFER DETAILS SHOWN ON THIS SHEET.
4. REFER TO BARRIER CONTRACTION JOINT DETAIL ON SHEET 3 FOR ADDITIONAL INFORMATION.
5. REFER TO SHEET 8 FOR ALTERNATE 3 STRAND TUBE RAIL PARAPET TRANSITION.

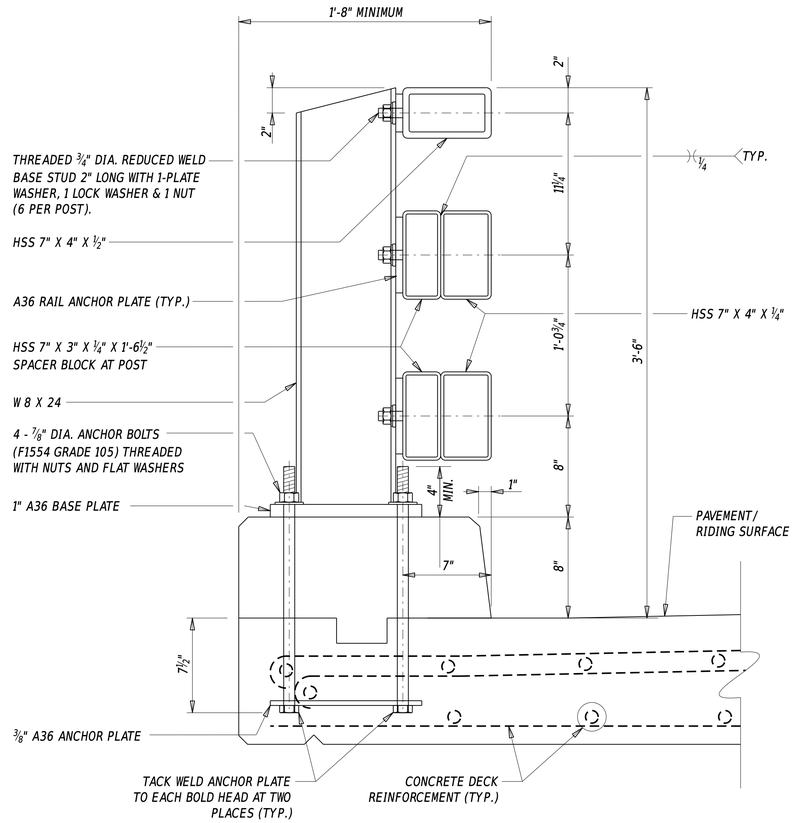

3 STRAND TUBE RAIL PARAPET SECTION

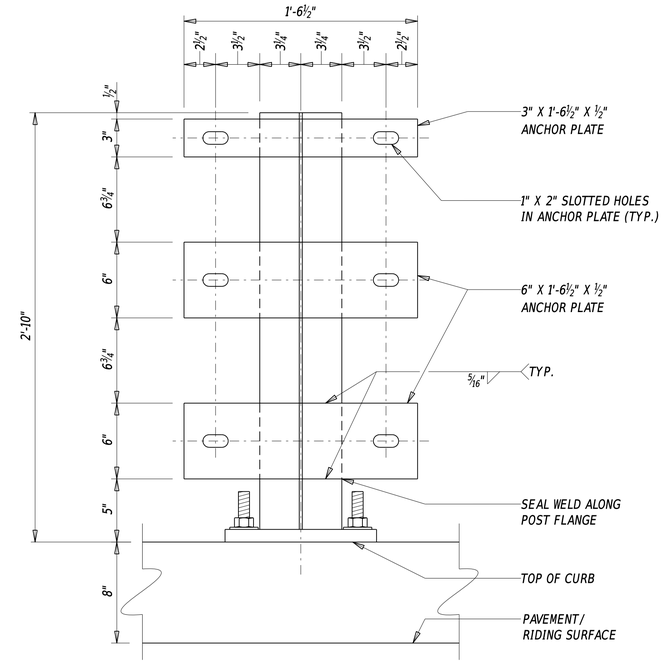

RAIL ANCHOR PLATE ELEVATION

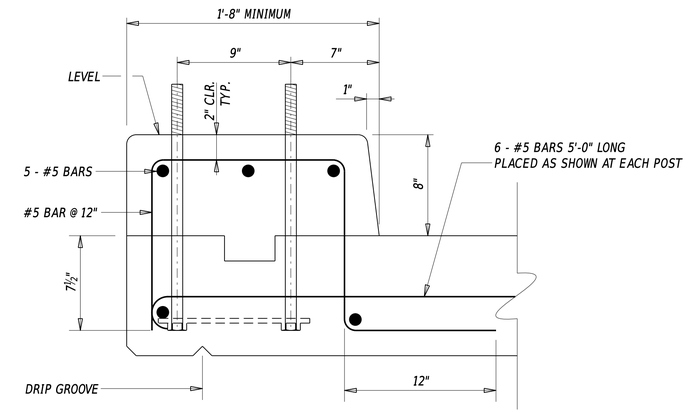

CURB REINFORCEMENT SECTION

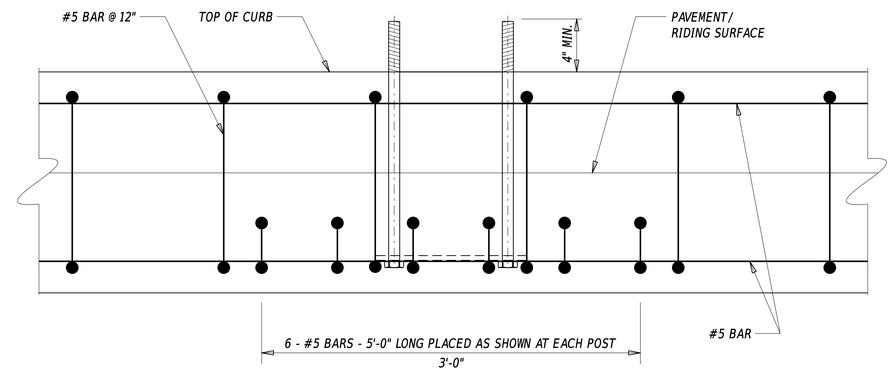

CURB REINFORCEMENT ELEVATION

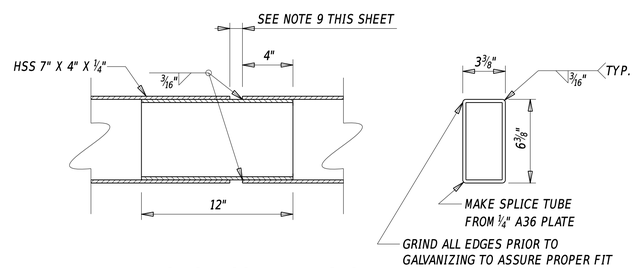

RAIL SPLICE DETAILS

HSS 7" X 4" X ¼"

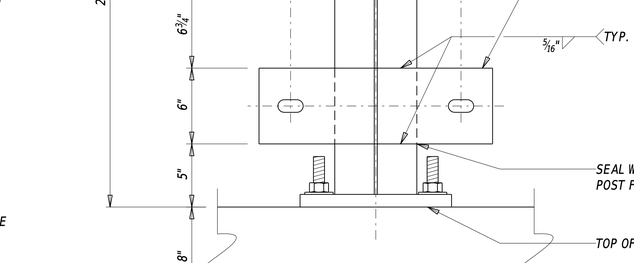

RAIL SPLICE DETAILS

HSS 7" X 4" X ½"

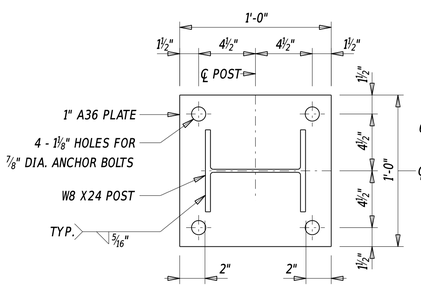

BASE PLATE DETAIL

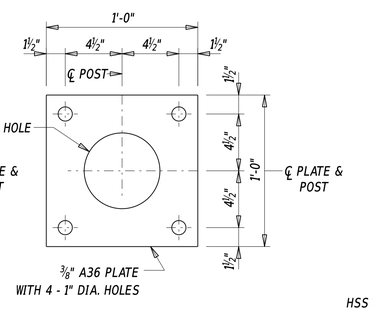

ANCHOR PLATE DETAIL

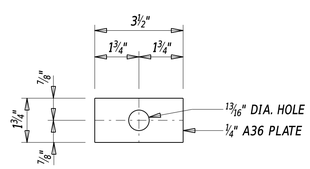

PLATE WASHER DETAIL

GENERAL 3 STRAND TUBE RAIL PARAPET NOTES

1. RAILS SHALL BE PARALLEL TO THE GRADE OF THE ROADWAY. RAIL SECTIONS SHALL BE ATTACHED TO AS MANY POSTS AS POSSIBLE, BUT NOT LESS THAN TWO.
2. THE CENTER LINE OF ANY SPLICE AND/OR CONTRACTION JOINT SHALL BE LOCATED AT LEAST 2'-0" AWAY FROM CENTER LINE OF A POST. CONTRACTION AND/ OR SPLICE JOINTS FOR EACH STRAND OF THREE STRAND RAILING SHALL BE PLACED IN THE SAME LOCATION AND IN THE SAME PANEL.
3. RAIL ELEMENTS SHALL BE STRUCTURAL TUBING IN ACCORDANCE WITH ASTM A500 GRADE C.
4. STEEL POSTS AND PLATES SHALL CONFORM TO ASTM A36 UNLESS OTHERWISE NOTED.
5. POSTS SHALL BE SET VERTICAL. MAXIMUM POST SPACING IS 10'-0".
6. ALL STRUCTURAL STEEL COMPONENTS INCLUDING FASTENERS SHALL BE HOT-DIP GALVANIZED AS PER ASTM A123 AFTER FABRICATION, EXCEPT AS NOTED. ALL ANCHOR PLATES SHALL BE ATTACHED BEFORE GALVANIZING.
7. ANCHOR BOLTS MUST BE SET SO THAT AT LEAST 4" OF THREAD FROM THE BOLT IS EXPOSED ABOVE THE TOP OF THE CURB.
8. PLATE WASHERS SHALL BE POSITIONED TO COMPLETELY COVER SLOTTED HOLES.
9. TUBE RAIL SPLICE JOINTS SHALL BE SPLICED AT 1-INCH. PROVIDE TUBE RAIL SPLICING AT 4-INCH OVER DECK EXPANSION JOINTS.
10. FABRICATION AND INSTALLATION OF THE 3 STRAND TUBE RAIL PARAPET SYSTEM WILL BE INCIDENTAL TO ITEM 626501 - THREE STRAND TUBE RAIL PARAPET.

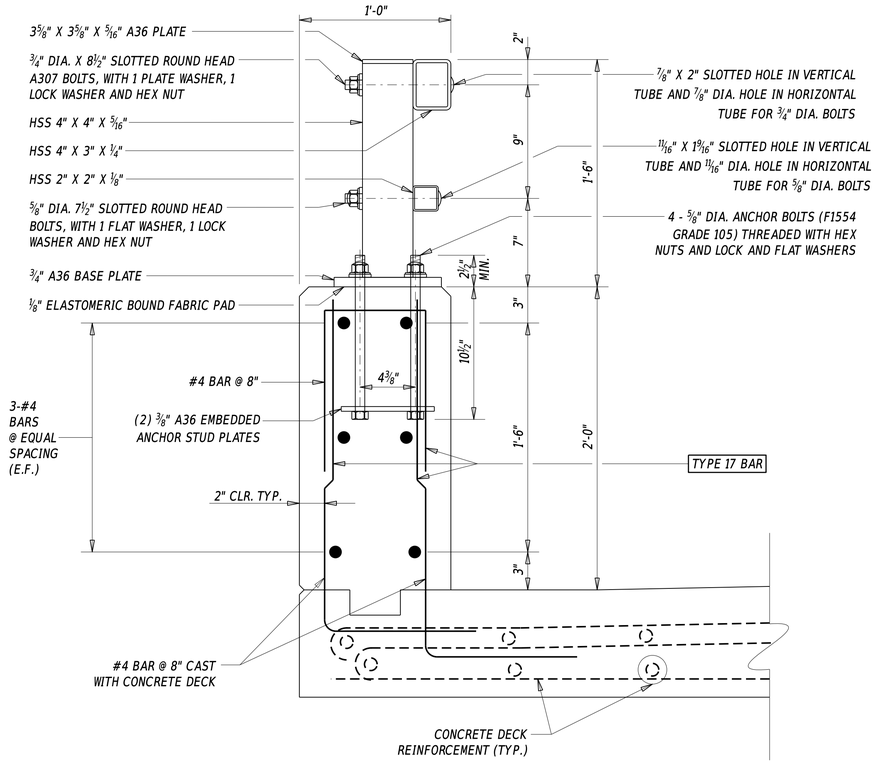

2 STRAND TUBE RAIL PARAPET SECTION

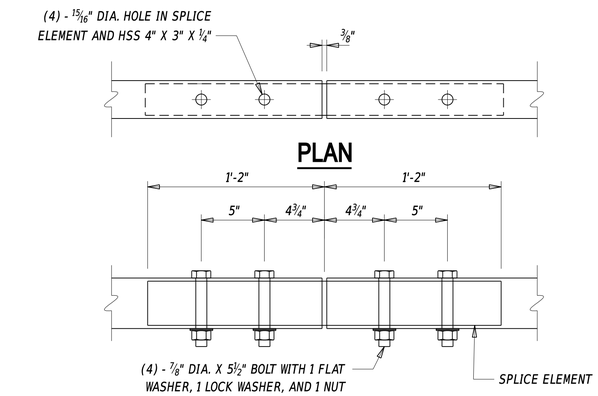

PLAN

SECTION

FIXED JOINT SPLICE PLAN AND SECTION

HSS 4" X 3" X 1/4"

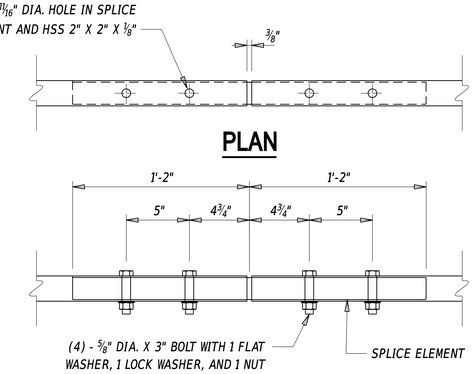

PLAN

SECTION

FIXED JOINT SPLICE PLAN AND SECTION

HSS 2" X 2" X 1/8"

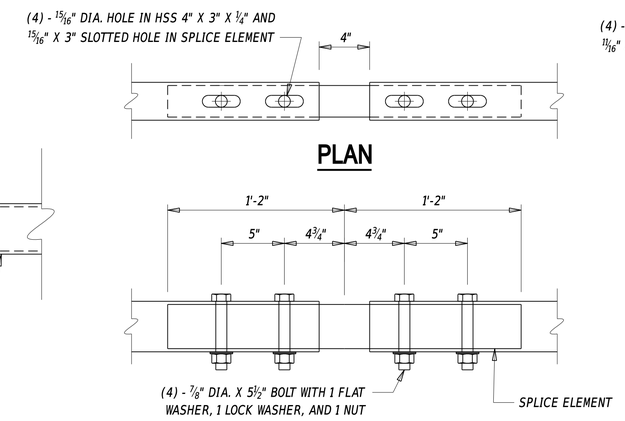

PLAN

SECTION

EXPANSION JOINT SPLICE PLAN AND SECTION

HSS 4" X 3" X 1/4"

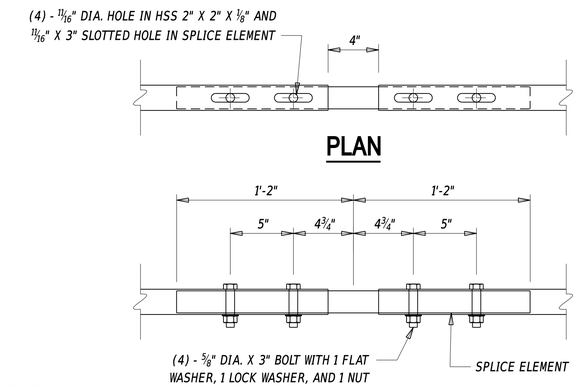

PLAN

SECTION

EXPANSION JOINT SPLICE PLAN AND SECTION

HSS 2" X 2" X 1/8"

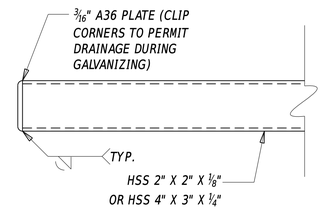

END OF RAIL

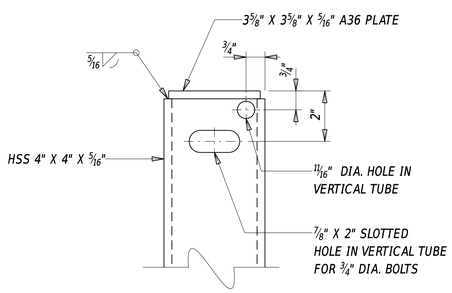

VERTICAL TUBE DETAIL

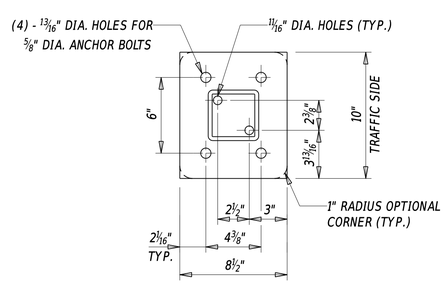

BASE PLATE DETAIL

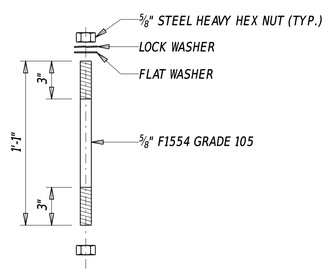

ANCHOR BOLT DETAIL

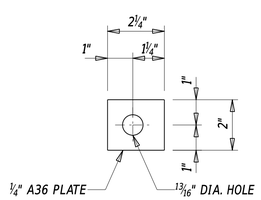

PLATE WASHER DETAIL

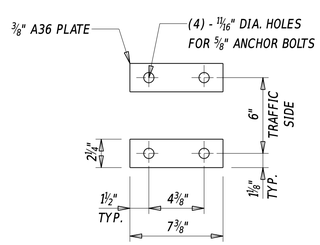

EMBEDDED ANCHOR STUD PLATE DETAIL

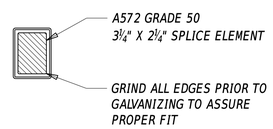

SPLICE ELEMENT

HSS 4" X 3" X 1/4"

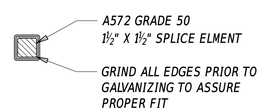

SPLICE ELEMENT

HSS 2" X 2" X 1/8"

GENERAL 2 STRAND TUBE RAIL PARAPET NOTES

1. THE CENTER LINE OF ANY SPLICE AND/OR CONTRACTION JOINT SHALL BE LOCATED AT LEAST 2'-0" AWAY FROM CENTER LINE OF A POST. CONTRACTION AND/ OR SPLICE JOINTS FOR EACH STRAND OF TWO STRAND RAILING SHALL BE PLACED IN THE SAME LOCATION AND IN THE SAME PANEL.
2. RAIL ELEMENTS SHALL BE STRUCTURAL TUBING IN ACCORDANCE WITH ASTM A500 GRADE C.
3. POSTS SHALL BE SET VERTICAL. MAXIMUM POST SPACING IS 6'-8".
4. ALL STRUCTURAL STEEL COMPONENTS INCLUDING FASTENERS SHALL BE HOT-DIP GALVANIZED AS PER ASTM A123 AFTER FABRICATION, EXCEPT AS NOTED.
5. PLATE WASHERS SHALL BE POSITIONED TO COMPLETELY COVER SLOTTED HOLES.
6. FABRICATION AND INSTALLATION OF THE 2 STRAND TUBE RAIL PARAPET SYSTEM WILL BE INCIDENTAL TO ITEM 626502 - TWO STRAND TUBE RAIL PARAPET.

ALTERNATE TUBE RAIL TRANSITION

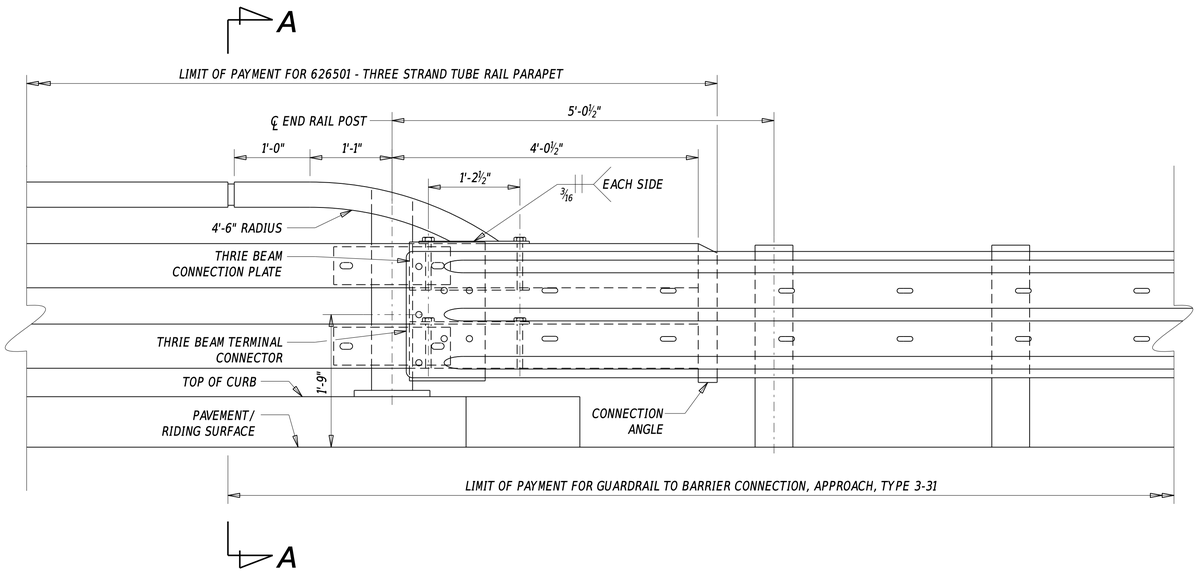

ALTERNATE TUBE RAIL TRANSITION ELEVATION

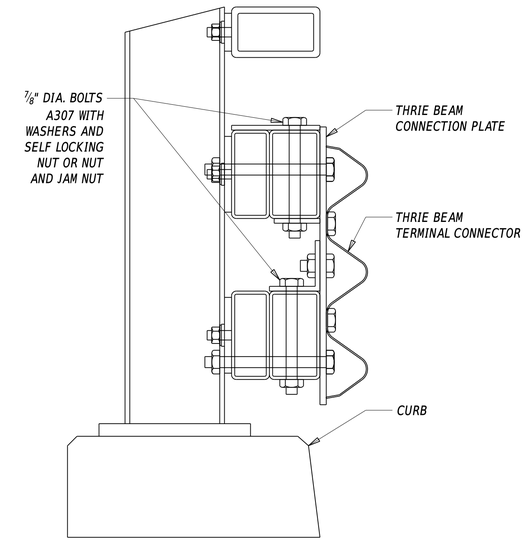

SECTION A-A

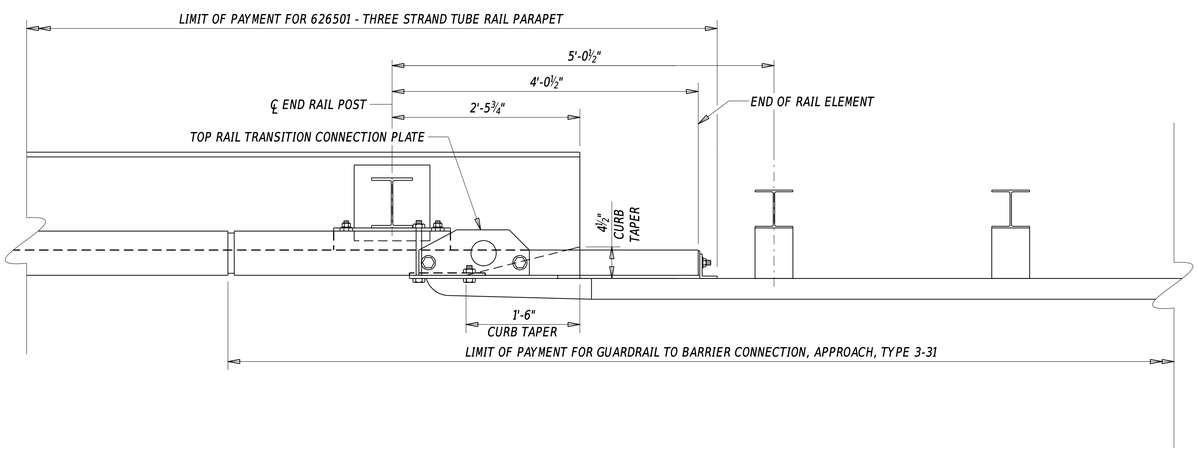

ALTERNATE TUBE RAIL TRANSITION PLAN

ALTERNATE TUBE RAIL TRANSITION

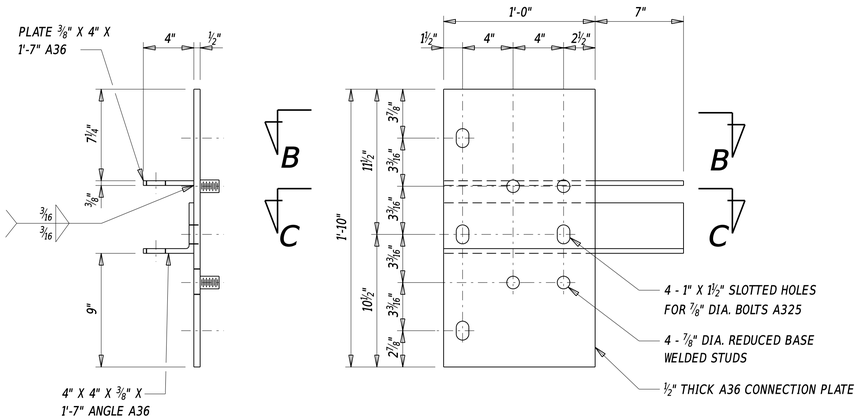

THRIE BEAM CONNECTION PLATE DETAIL

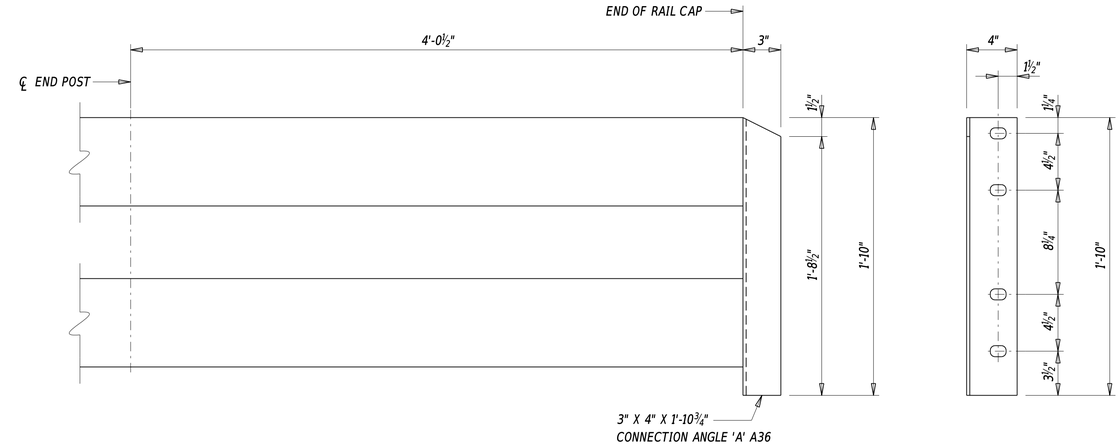

CONNECTION ANGLE DETAIL

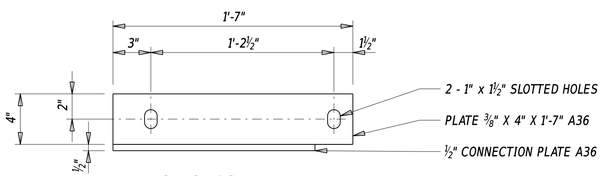

SECTION B-B

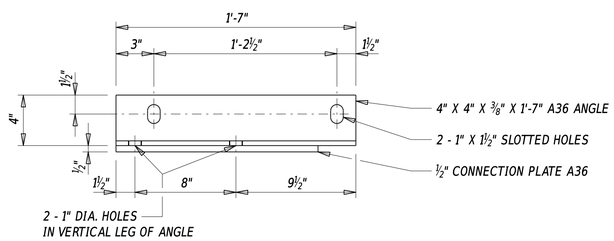

SECTION C-C

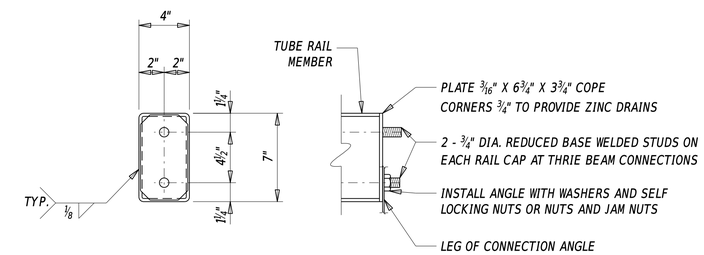

RAIL CAP DETAIL

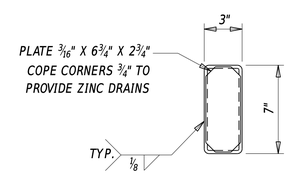

RAIL CAP FOR SPACER BLOCK DETAIL

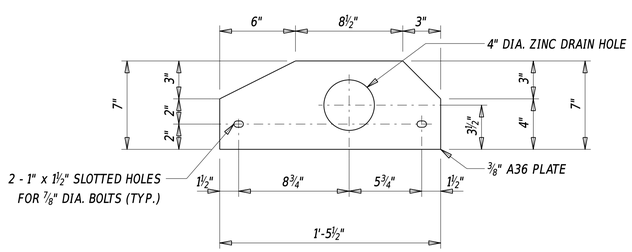

TOP RAIL TRANSITION PLATE

ALTERNATE TUBE RAIL TRANSITION

1. SEE DELDOT STANDARD CONSTRUCTION DETAIL NO. B-10 FOR ADDITIONAL INFORMATION ON POST SIZING, POST SPACING, AND PAY LIMITS FOR ATTACHING APPROACH BARRIER TO GUARDRAIL CONNECTION. MOUNT THE THRIE BEAM GUARDRAIL TO THE BRIDGE RAIL END AT 31" AND SUBSTITUTE THE SYMMETRIC W-BEAM TO THRIE-BEAM TRANSITION WITH THE ASYMMETRIC TRANSITION SHOWN IN DELDOT STANDARD CONSTRUCTION DETAIL NO. B-13 SHEET 6.
2. ALL HARDWARE REQUIRED TO CONNECT THE THRIE BEAM TRANSITION TO THE PARAPET END WILL BE INCIDENTAL TO ITEM 626501 - THREE STRAND TUBE RAIL PARAPET.
3. LAP APPROACH GUARDRAIL TO PREVENT SNAGS FROM ONCOMING TRAFFIC.
4. PLACE GUARDRAIL REFLECTOR AS PER THE DELAWARE MANUAL ON UNIFORM TRAFFIC CONTROL DEVICES.

ALUMINUM PEDESTRIAN RAILING

NOTE: MAINTAIN UNIFORM NORMAL POST SPACING WHEN POSSIBLE.

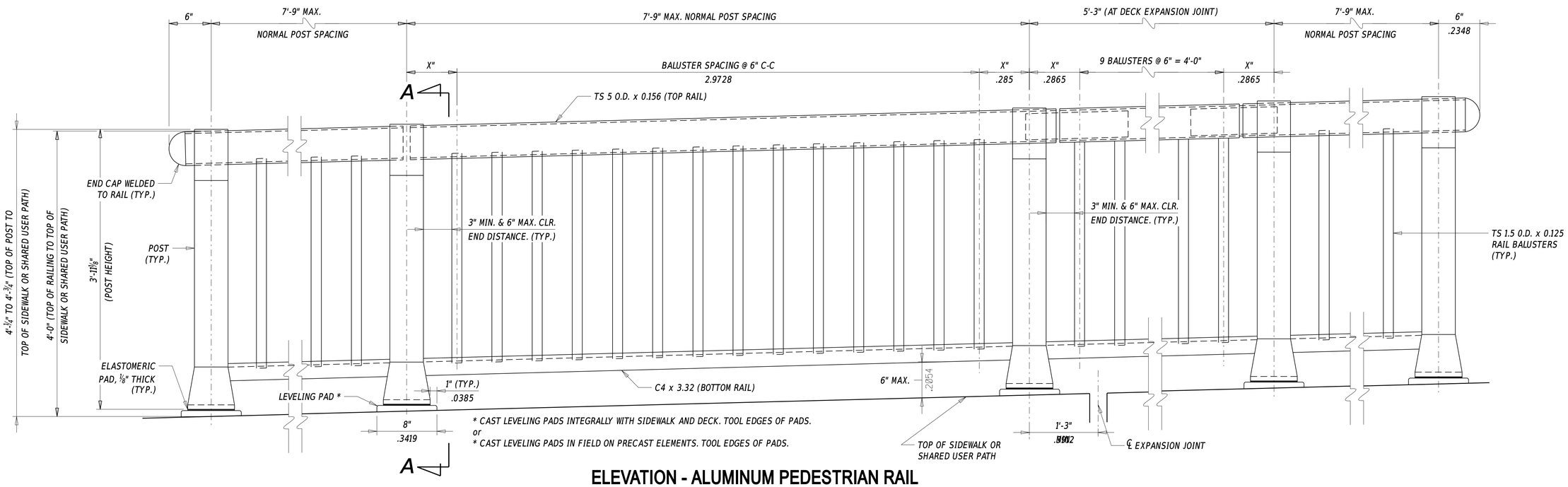

ELEVATION - ALUMINUM PEDESTRIAN RAIL

NOTE: NOT FOR USE ADJACENT TO VEHICULAR TRAFFIC.

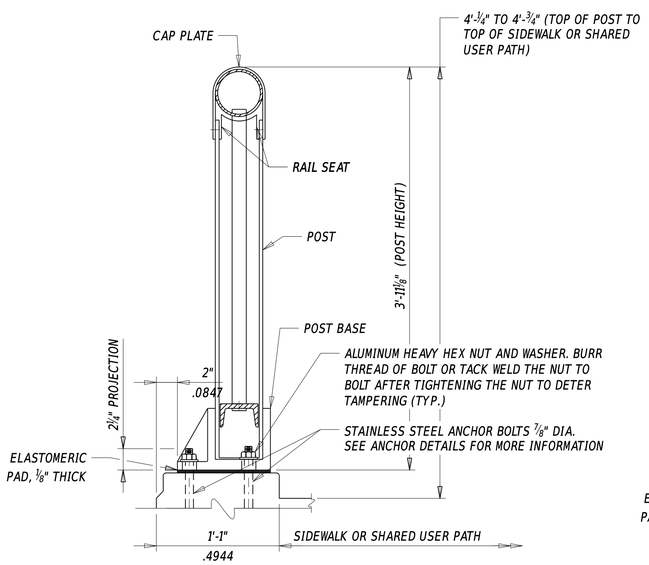

SECTION A-A

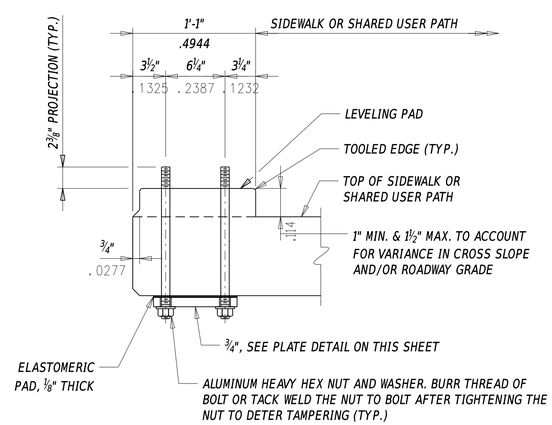

ANCHOR DETAIL FOR RAILING MOUNTED ONTO CONCRETE DECK

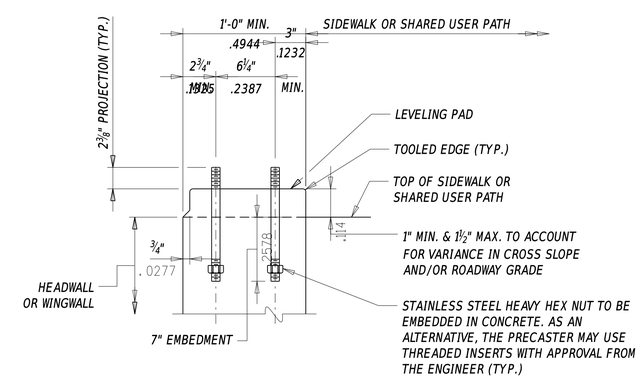

ANCHOR DETAIL FOR RAILING MOUNTED ONTO CONCRETE HEADWALL OR WINGWALL

NOTE: FOR ANCHOR DETAIL, THE CONTRACTOR HAS THE OPTION TO PROPOSE FIELD DRILLING AND INSTALLING MANUFACTURED ANCHORS OR MECHANICAL FASTENERS CAPABLE OF DEVELOPING THE FULL STRENGTH OF THE BOLT WITH APPROVAL OF THE ENGINEER.

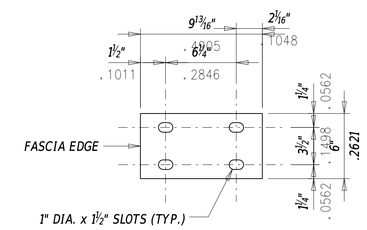

ELASTOMERIC PAD DETAIL 1/8" THICK

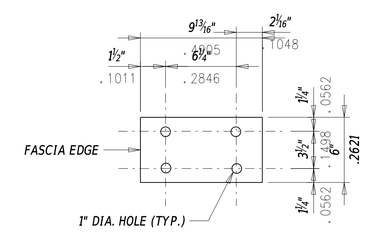

PLATE DETAIL 3/4" THICK

DELDOT BRIDGE DESIGN SECTION	DELAWARE DEPARTMENT OF TRANSPORTATION BRIDGE DESIGN MANUAL	BRIDGE RAILING DETAILS	NOT TO SCALE

ISSUE DATE	
10/01/2015	
04/01/2021	

DETAIL No. 325.02

SHEET No. 10 of 11

ALUMINUM PEDESTRIAN RAILING

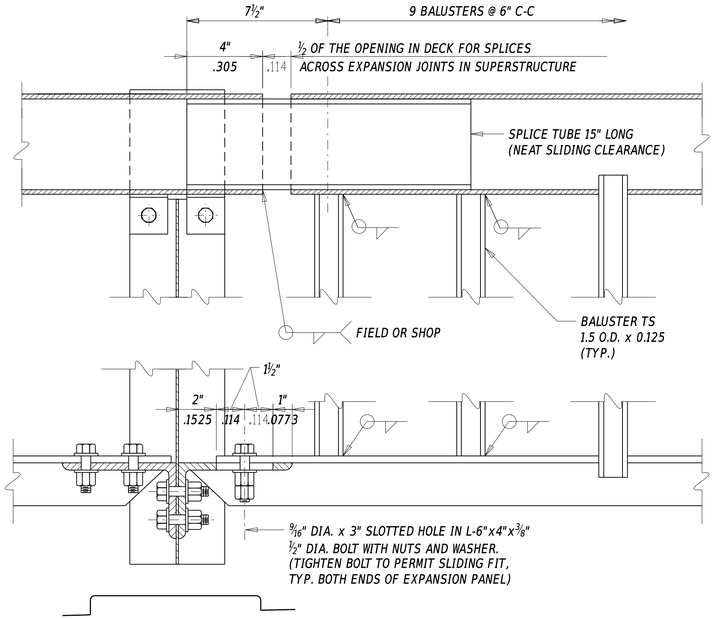

TYPICAL EXPANSION PANEL DETAIL

NOTE: POST BASE NOT SHOWN FOR CLARITY.

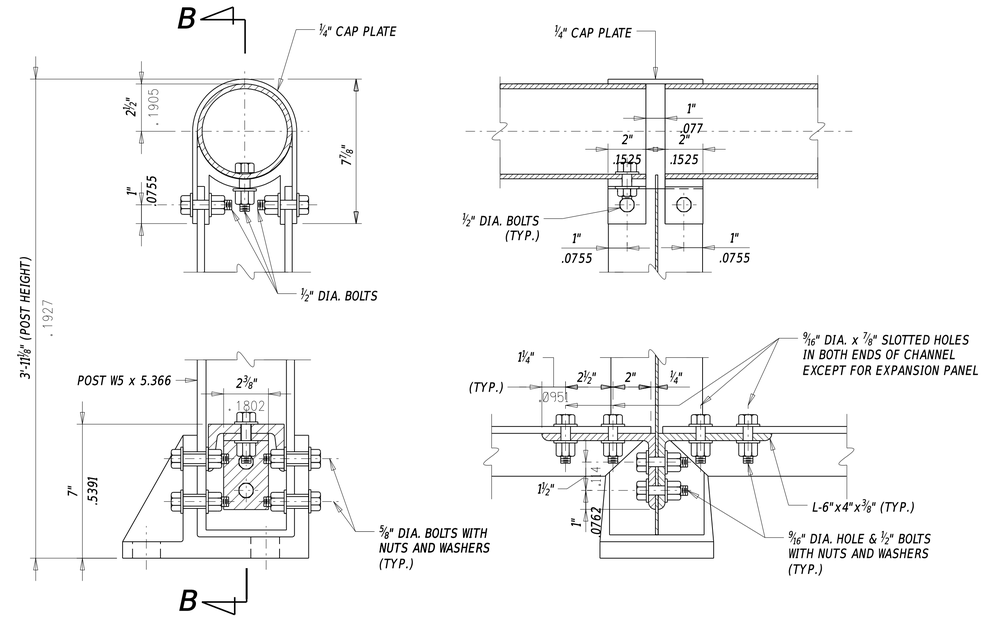

END ELEVATION

SECTION B-B

TYPICAL DETAIL AT POST

GENERAL ALUMINUM PEDESTRIAN RAILING NOTES

1. PLACE POSTS, BALUSTERS, AND ANCHOR BOLTS TRULY VERTICAL. PLACE RAILS PARALLEL TO GRADE.
2. PLACE END CAPS FLUSH WITH RAILS.
3. DO NOT PAINT ANY MATERIALS.
4. PROVIDE UNIFORM SPACING OF BALUSTERS IN EACH PANEL. IF POST SPACING SHOWN ON (sheets 10 and 11, edit as needed) DOES NOT RESULT IN 6" SPACING FOR THE BALUSTERS, ADJUST THE DIFFERENCE BY INCREASING OR DECREASING BALUSTER SPACING BY NOT MORE THAN ¼". WHEN REQUIRED, ADJUST END CLEAR SPACING BETWEEN POST TO ADJACENT BALUSTER FROM 3" MIN. TO 6" MAX.
5. SIMILAR ALUMINUM RAILING SYSTEM MAY BE SUBSTITUTED FOR THE SPECIFIED RAILING SYSTEM WITH APPROVAL OF THE ENGINEER.
6. FABRICATION AND INSTALLATION OF THE ALUMINUM RAILING SYSTEM WILL BE INCIDENTAL TO ITEM 626010 - ALUMINUM PEDESTRIAN RAILING.

MATERIAL NOTES

1. MATERIALS FOR ALUMINUM RAILING SYSTEM AND NUTS MUST MEET REQUIREMENTS OF ASTM B221 ALLOY 6061-T6.
2. ELASTOMERIC PADS MUST MEET REQUIREMENTS OF 60 +/- SHORE A DUROMETER.
3. STAINLESS STEEL HEX NUTS MUST MEET REQUIREMENTS OF ASTM A316.
4. BOLTS MUST MEET REQUIREMENTS OF ASTM B211, ALUMINUM ALLOY 2024-T4.
5. ANCHOR BOLTS MUST MEET REQUIREMENTS OF ASTM A276, TYPE 304 OR TYPE 430 (THREADS TO BE ROLLED NOT CUT).
6. ALUMINUM WASHERS MUST MEET REQUIREMENTS OF ASTM B209 ALLOY ALCLAD 2024-T4.

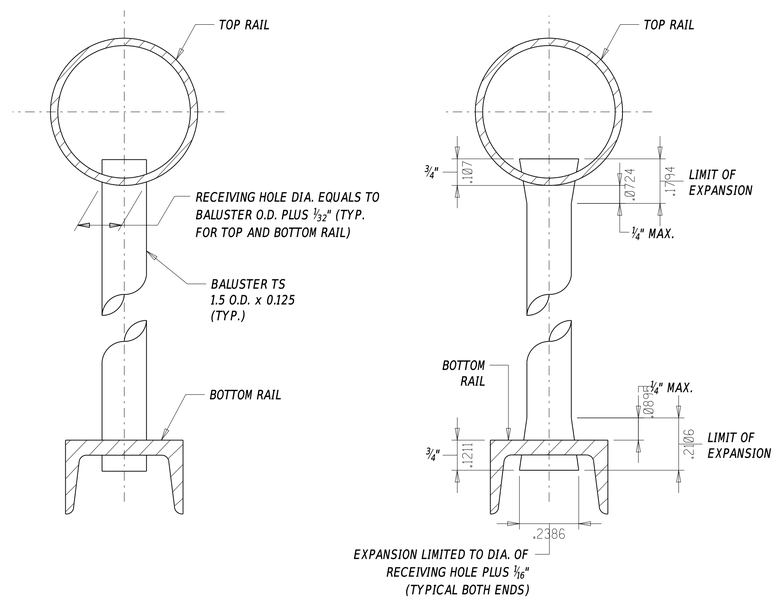

PRIOR TO EXPANDING

EXPANDED

BALUSTER DETAILS

EXPAND FULL CIRCUMFERENCE OF BALUSTER WITHIN THE LIMIT OF EXPANSION.

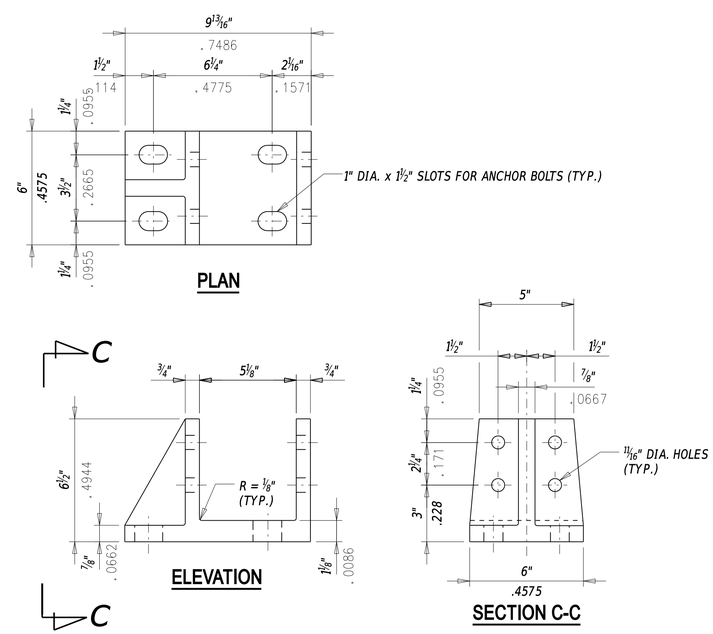

PLAN

ELEVATION

SECTION C-C

POLE BASE DETAIL

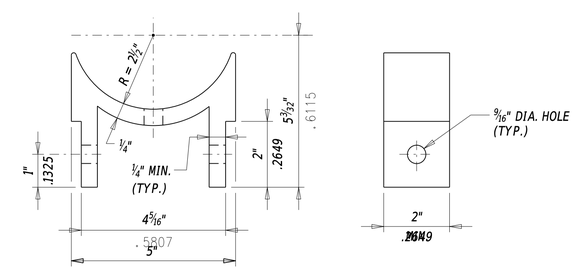

ELEVATION

END VIEW

RAIL SEAT DETAIL

DELDOT BRIDGE DESIGN SECTION	DELAWARE DEPARTMENT OF TRANSPORTATION BRIDGE DESIGN MANUAL	BRIDGE RAILING DETAILS	NOT TO SCALE

ISSUE DATE	
10/01/2015	
10/01/2017	
04/01/2021	

DETAIL No. 325.02

SHEET No. 11 of 11

NOTE: THE PLACEMENT OF #5 STIRRUP BARS IN THE TRANSVERSE DIRECTION MUST AVOID CONFLICTING WITH #5 STIRRUP BARS IN THE LONGITUDINAL DIRECTION.

NOTE: ABUTMENT AND SLEEPER SLAB DETAILS NOT SHOWN FOR CLARITY.

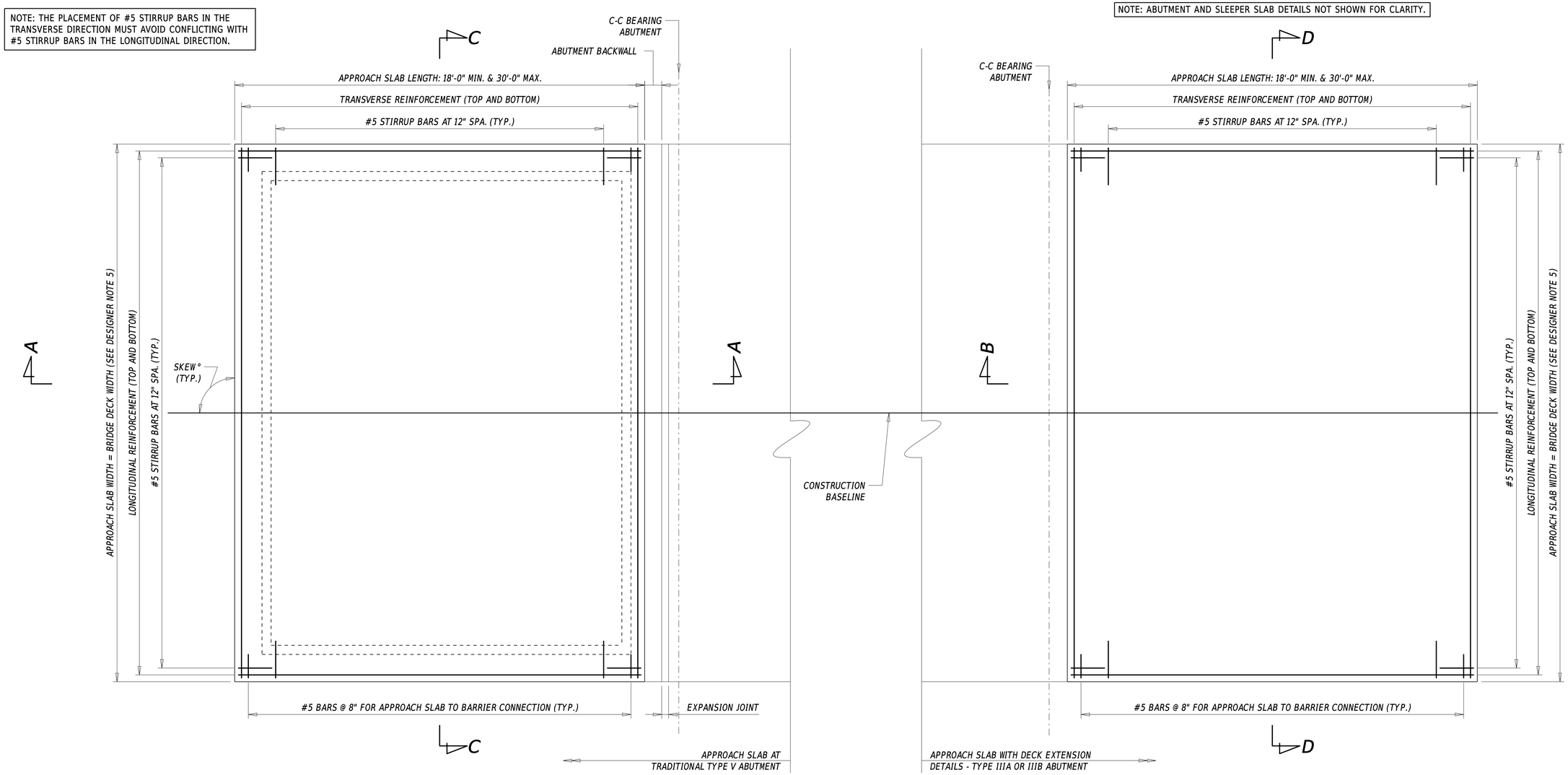

PLAN

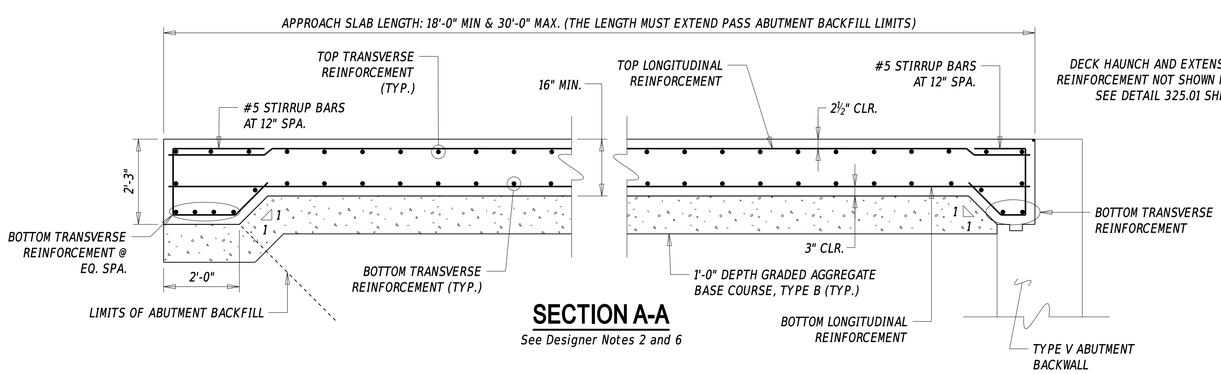

SECTION A-A

See Designer Notes 2 and 6

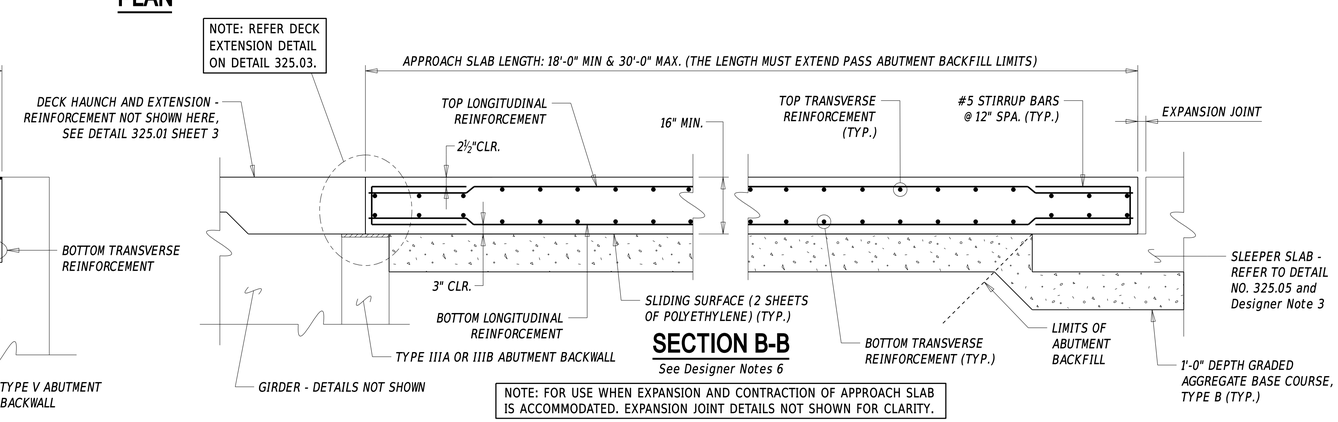

SECTION B-B

See Designer Notes 6

NOTE: FOR USE WHEN EXPANSION AND CONTRACTION OF APPROACH SLAB IS ACCOMMODATED. EXPANSION JOINT DETAILS NOT SHOWN FOR CLARITY.

DELAWARE DEPARTMENT OF TRANSPORTATION BRIDGE DESIGN MANUAL	APPROACH SLAB DETAILS	NOT TO SCALE	ISSUE DATE 10/01/2015 2022 10/01/2016 01/31/2019	DETAIL No. 325.03 SHEET No. 1 of 2

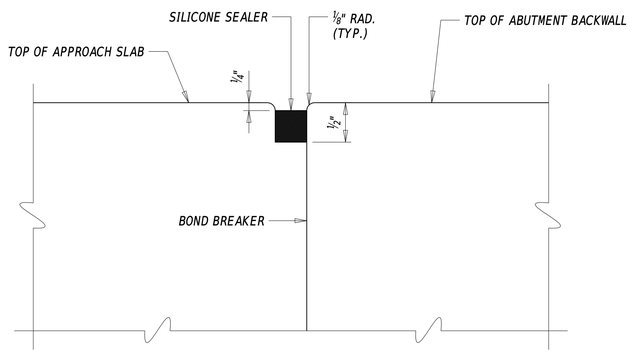

JOINT BETWEEN APPROACH SLAB AND TYPE V ABUTMENT BACKWALL

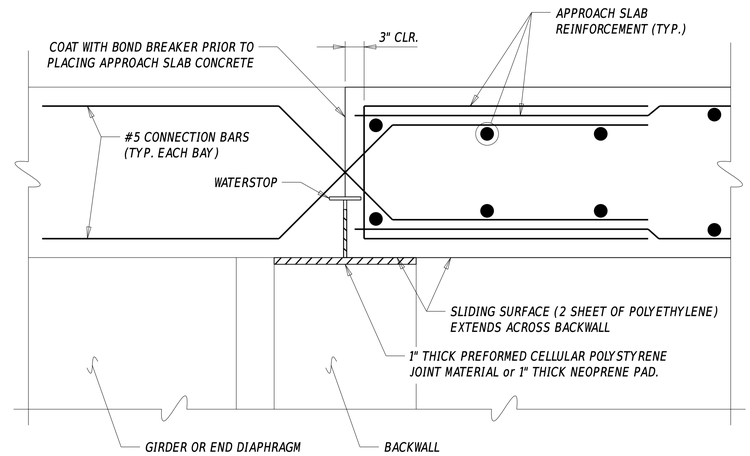

JOINT BETWEEN APPROACH SLAB AND DECK EXTENSION

NOTE: REINFORCEMENT PROTRUDING FROM END CONCRETE DECK DIAPHRAGM INTO APPROACH SLAB NOT SHOWN FOR CLARITY. THE EXAMPLE USED IS A TYPE IIIA OR IIIB ABUTMENT WITH DECK EXTENSION DETAILS. FOR SEMI-INTEGRAL ABUTMENTS, SEE SECTION 325.01 SHEET 3 FOR APPROACH SLAB TO END DIAPHRAGM DETAILS.

DESIGNER NOTES

1. REFER TO SECTIONS 103.3.7, 103.6.2, AND 106.7 FOR MORE INFORMATION ON APPROACH SLAB DESIGN.
2. THE APPROACH SLAB DETAILS AS SHOWN AT REINFORCED CONCRETE CANTILEVER OR STUB ABUTMENT UTILIZES LONGITUDINAL EDGE BEAMS. HOWEVER THIS IS NOT REQUIRED FOR ALL PROJECTS. THE NEED FOR LONGITUDINAL EDGE BEAMS WILL BE EVALUATED BY THE DESIGNER ON A CASE-BY-CASE BASIS.
3. SUPPORT AT THE ROADWAY END FOR APPROACH SLAB AT TYPE I INTEGRAL, TYPE IIC SEMI-INTEGRAL, OR TYPE IIIA AND IIIB DECK EXTENSION ABUTMENTS SHALL BE PROVIDED BY SLEEPER SLAB TO REMOVE OR MINIMIZE THE NUMBER OF EXPANSION JOINTS AT THE BRIDGE. REFER TO DETAIL NO. 325.05 - SLEEPER SLAB DETAILS.
4. THE PREFERRED EXPANSION JOINT TYPE BETWEEN THE ROADWAY END OF THE APPROACH SLAB AND SLEEPER SLAB IS STRIP SEAL EXPANSION JOINT. REFER TO DETAIL NO. 340.01 - STRIP SEAL EXPANSION JOINT DETAILS.
5. IT IS DELDOT'S PREFERENCE TO HAVE THE APPROACH SLAB WIDTH EQUAL TO THE BRIDGE DECK WIDTH, BUT WITH WINGWALLS OR MSE WALLS PLACED OUTSIDE OF THE APPROACH SLAB. HOWEVER, EXCEPTIONS MAY BE MADE FOR REDUCTION IN APPROACH SLAB WIDTH TO ACCOMMODATE GUARDRAIL POST PLACEMENTS.
6. UNDER SECTION A-A AND B-B VIEWS, THE EXAMPLE ASSUMES A ZERO PERCENT ROADWAY GRADE. IF THE GRADE IS ABOVE ZERO PERCENT, THE DETAILS SHOULD BE SHOWN AS SLOPED WITH THE SLOPE GRADE VALUE LISTED.
7. BREAK POINTS SHOULD BE CALLED OUT AND SHOWN IN SECTION C-C OR D-D VIEWS IN THE PLANS. IF POSSIBLE, ANY SUPERELEVATION TRANSITIONS SHOULD BE COMPLETED OUTSIDE THE LIMITS OF THE BRIDGE, INCLUDING THE LIMITS OF APPROACH SLAB. HENCE THE BREAK POINT LOCATIONS AND CROSS SLOPE VALUES AT THE BRIDGE SHOULD MIRROR THOSE AT APPROACH SLAB.
8. IN CASES WHERE P.C.C. PAVEMENT TIES IN WITH THE END OF APPROACH SLAB, THE DESIGNER SHOULD CONSIDER PROVIDING EXPANSION MATERIAL (ASPHALT PLUG JOINT, 6" TO 12" ASPHALT STRIP, ETC.) BETWEEN THE APPROACH SLAB AND P.C.C. PAVEMENT.

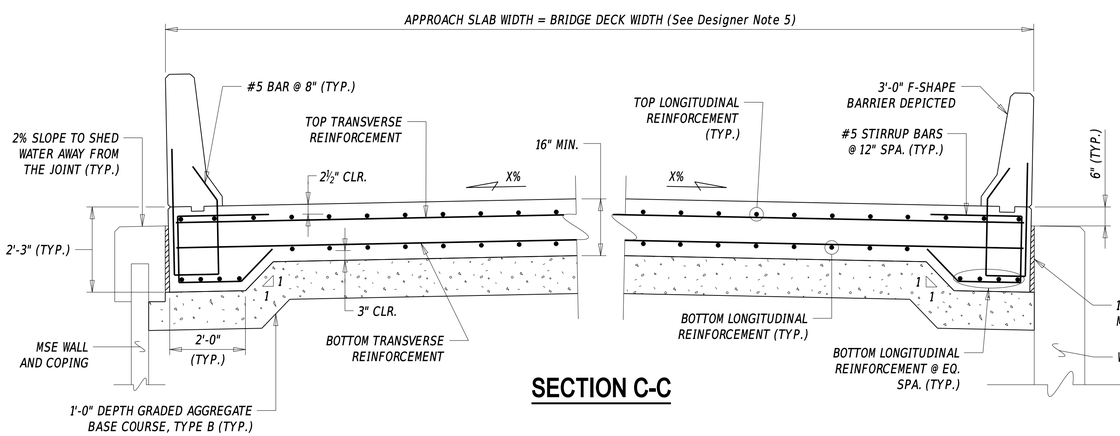

SECTION C-C

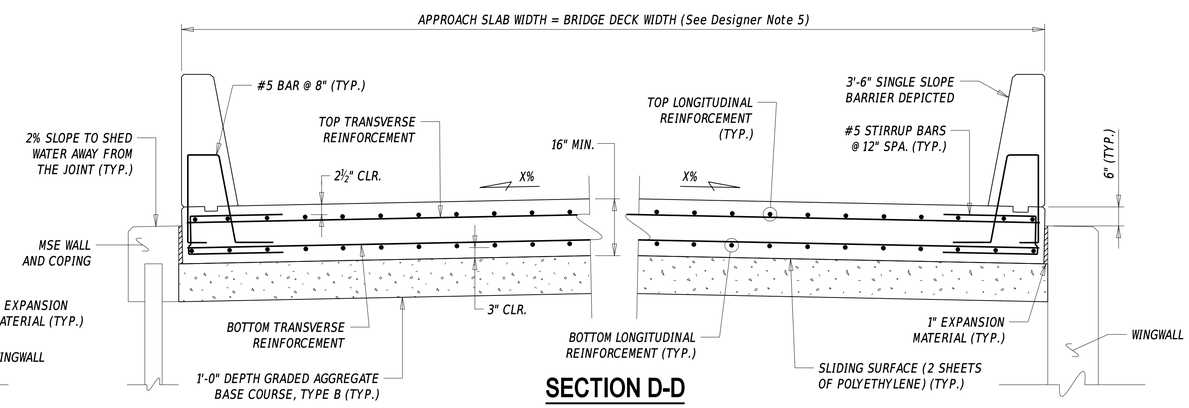

SECTION D-D

DELDOT BRIDGE DESIGN SECTION	DELAWARE DEPARTMENT OF TRANSPORTATION BRIDGE DESIGN MANUAL	APPROACH SLAB DETAILS	NOT TO SCALE	ISSUE DATE: 10/01/2015, 2022; 10/01/2016; 01/31/2019	DETAIL No. 325.03 SHEET No. 2 of 2

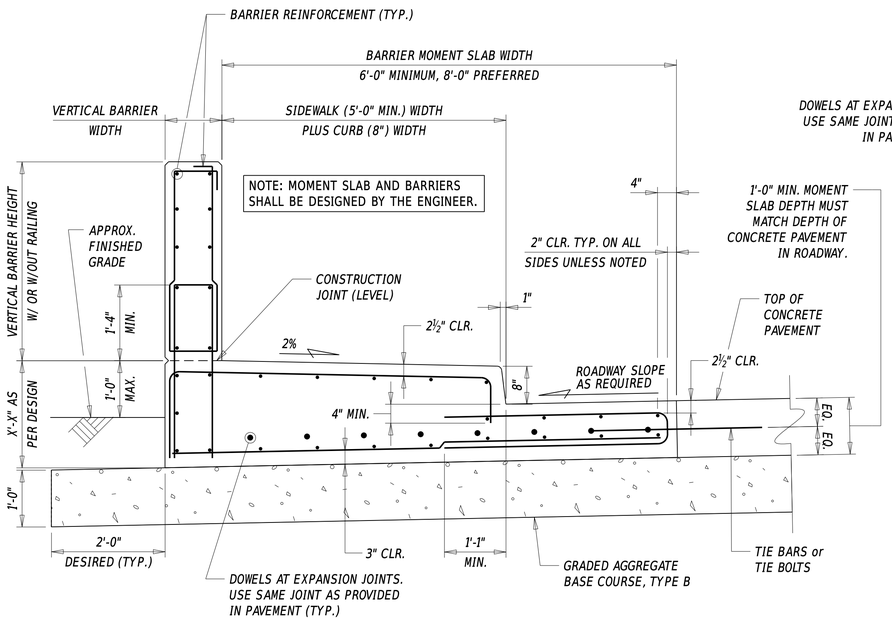

MOMENT SLAB WITH ALTERNATE SIDEWALK AND VERTICAL C.I.P. WALL BARRIER (P.C.C. PAVEMENT)

NOTE: MOMENT SLAB AND BARRIERS SHALL BE DESIGNED BY THE ENGINEER.

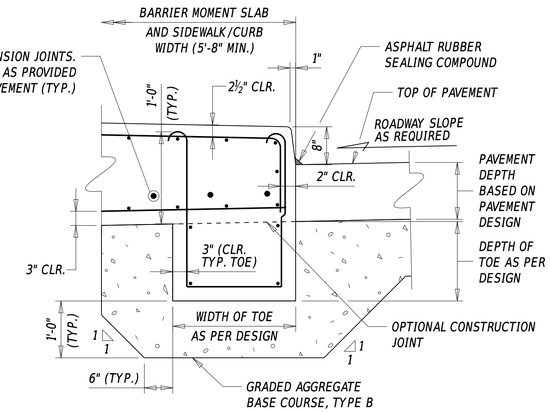

MOMENT SLAB WITH ALTERNATE SIDEWALK AND VERTICAL C.I.P. WALL BARRIER (HALF-SECTION FOR BITUMINOUS CONCRETE)

NOTE: THE DESIGNER MAY CONSIDER INCREASING THE DEPTH OF THE MOMENT SLAB IN LIEU OF USING TOE.

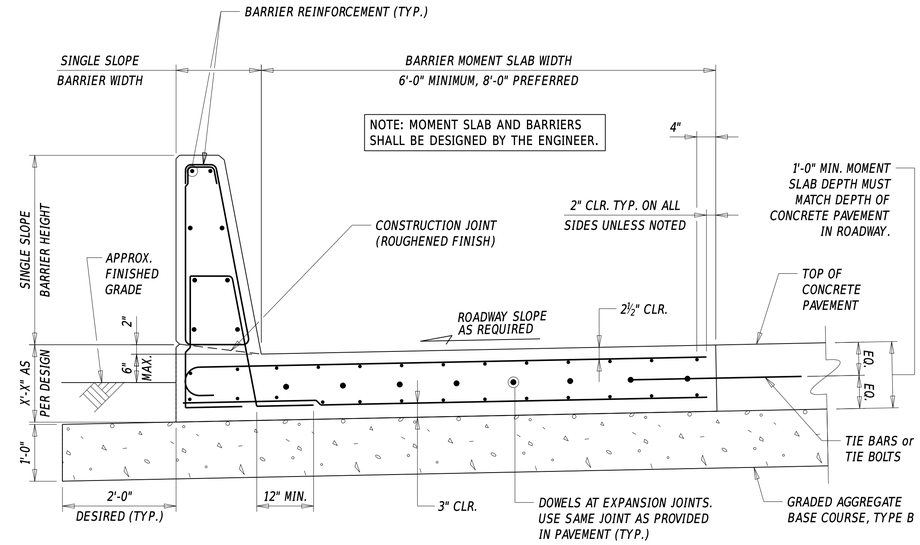

MOMENT SLAB WITH P.C.C. PAVEMENT (AT-GRADE) WITH TYPICAL C.I.P. BARRIER

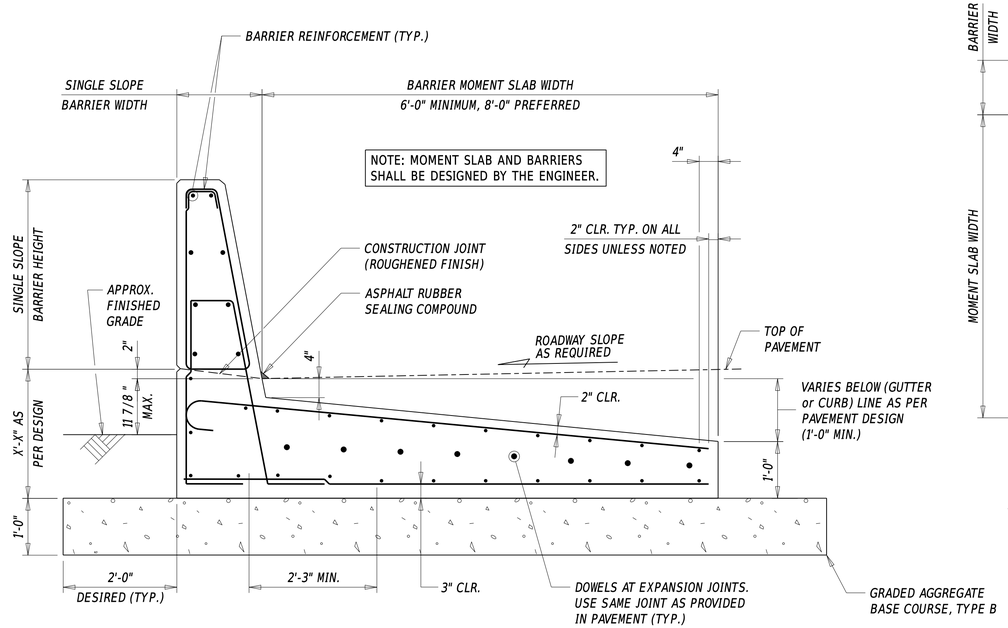

MOMENT SLAB WITH BITUMINOUS CONCRETE (BURIED) WITH TYPICAL C.I.P. BARRIER

NOTE: FOR ALL TYPES OF PAVEMENT, THE HEEL OF MOMENT SLAB SHOULD NOT EXTEND PAST THE SHOULDER STRIPING INTO THE TRAVELED WAY.

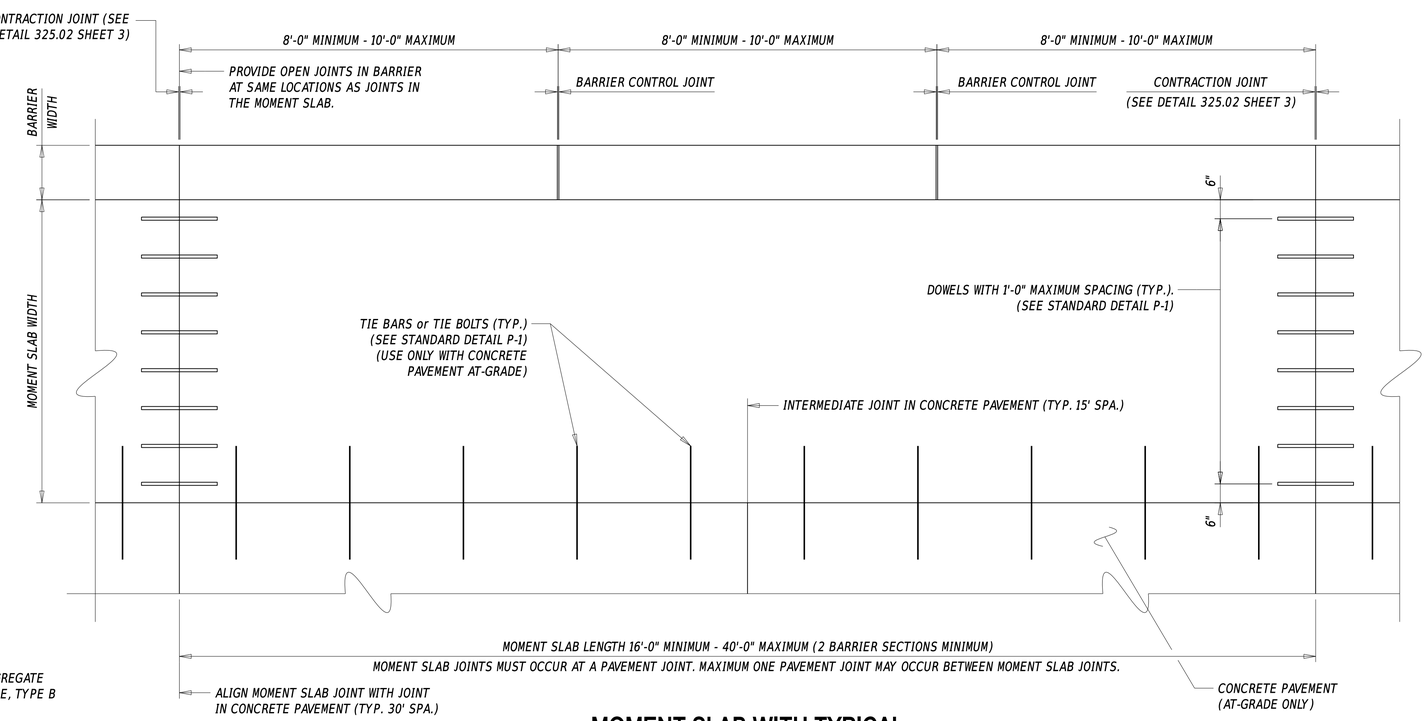

MOMENT SLAB WITH TYPICAL C.I.P. BARRIER PLAN

NOTE: MOMENT SLAB REINFORCEMENT NOT SHOWN FOR CLARITY, BUT MUST BE SHOWN ON THE PLANS. LONGITUDINAL BARRIER REINFORCEMENT MUST BE CONTINUOUS THROUGH BARRIER SECTIONS THROUGHOUT THE ENTIRE MOMENT SLAB LENGTH.

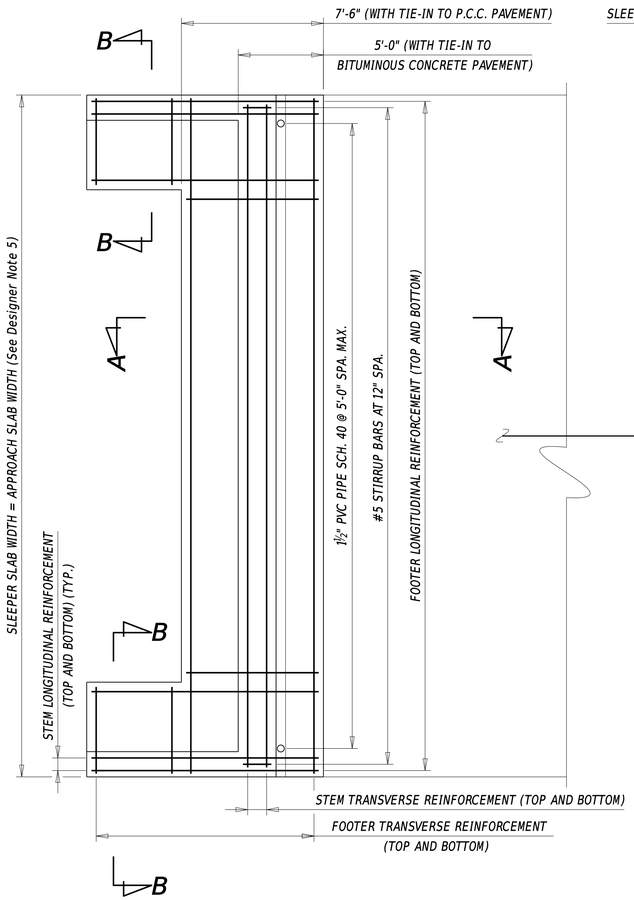

SLEEPER SLAB REINFORCEMENT PLAN

NOTE: BARRIER AND BARRIER-TO-SLEEPER SLAB REINFORCEMENT NOT SHOWN FOR CLARITY.

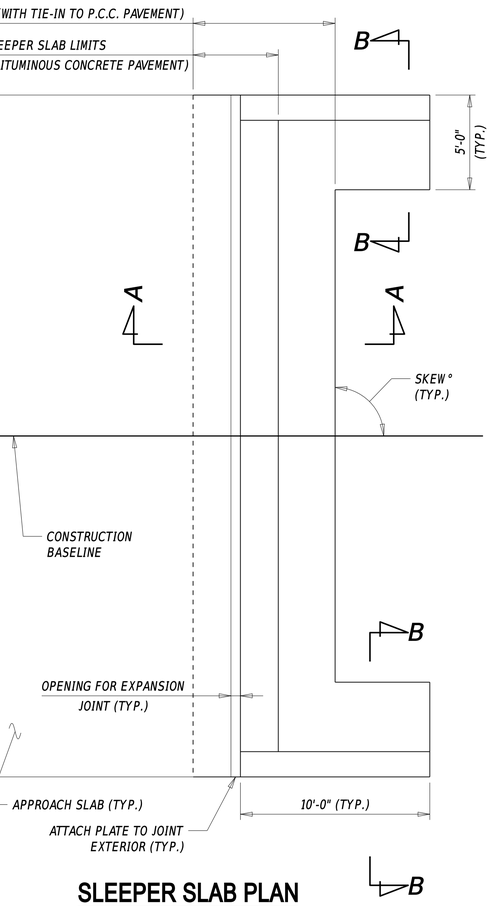

SLEEPER SLAB PLAN

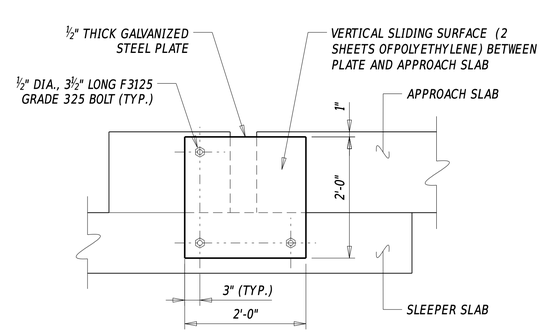

PLATE DETAIL

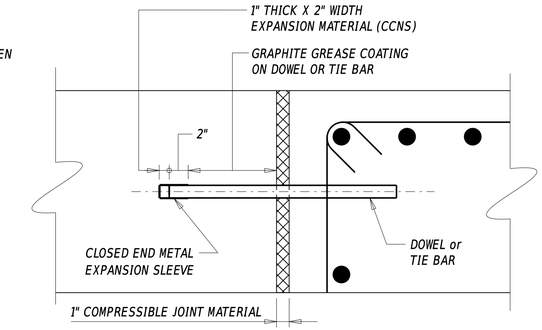

DETAIL A

CCNS = CLOSED CELL NEOPRENE SPONGE

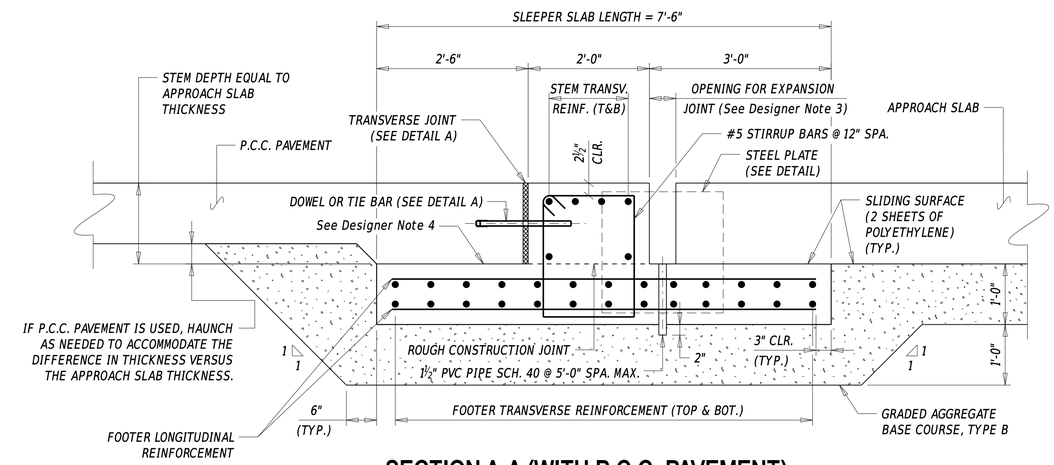

SECTION A-A (WITH P.C.C. PAVEMENT)

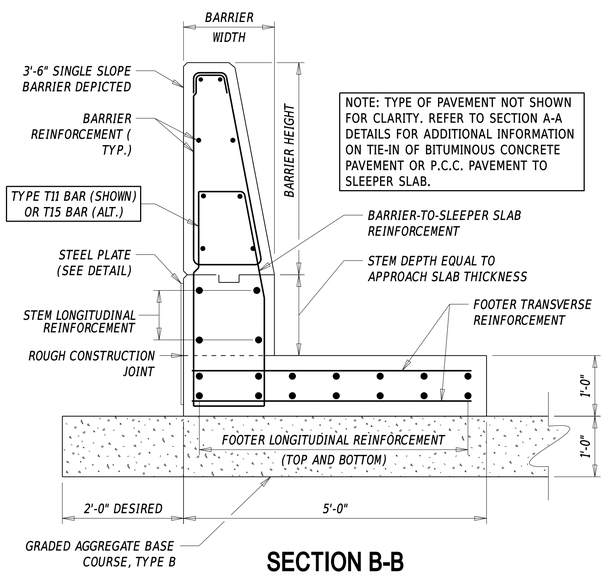

NOTE: TYPE OF PAVEMENT NOT SHOWN FOR CLARITY. REFER TO SECTION A-A DETAILS FOR ADDITIONAL INFORMATION ON TIE-IN OF BITUMINOUS CONCRETE PAVEMENT OR P.C.C. PAVEMENT TO SLEEPER SLAB.

SECTION B-B

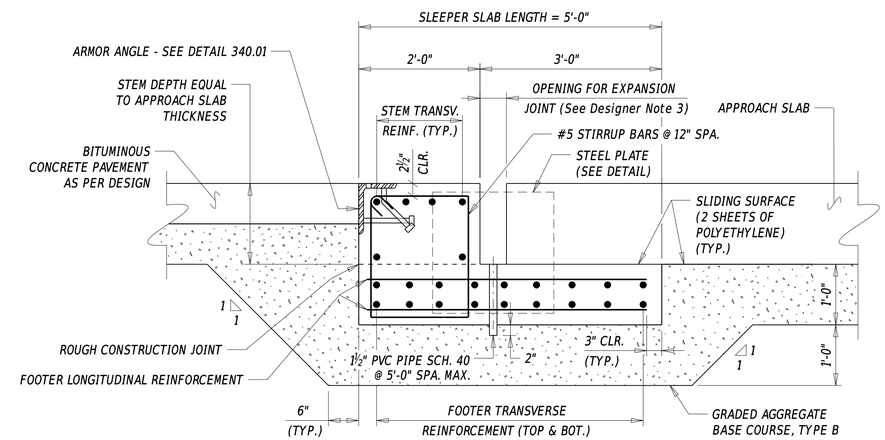

SECTION A-A (WITH BITUMINOUS CONCRETE PAVEMENT)

DESIGNER NOTES

1. REFER TO SECTION 106.7.1 FOR MORE INFORMATION ON SLEEPER SLAB DESIGN.
2. SLEEPER SLABS SHALL BE REQUIRED FOR ALL PROJECTS THAT UTILIZE TYPE I INTEGRAL, TYPE IIC SEMI-INTEGRAL, AND TYPE IIIA OR IIIB DECK EXTENSION ABUTMENTS WHERE THE DECK JOINT IS PROVIDED AT THE ROADWAY END OF THE APPROACH SLAB. REFER TO DETAIL NO. 325.03 - APPROACH SLAB DETAILS.
3. THE PREFERRED EXPANSION JOINT TYPE BETWEEN THE ROADWAY END OF THE APPROACH SLAB AND SLEEPER SLAB IS STRIP SEAL EXPANSION JOINT. REFER TO DETAIL NO. 340.01 - STRIP SEAL EXPANSION JOINT.
4. PROVIDE SLIDING SURFACE BETWEEN BOTTOM OF P.C.C. PAVEMENT AND TOP OF SLEEPER SLAB FOOTER.
5. IT IS DELDOT'S PREFERENCE TO HAVE THE SLEEPER SLAB WIDTH EQUAL TO THE APPROACH SLAB WIDTH. REFER TO DETAIL NO. 325.03 - 'APPROACH SLAB DETAILS' FOR MORE INFORMATION.
6. BREAK POINTS SHOULD BE CALLED OUT AND SHOWN IN SLEEPER SLAB PLAN. IF POSSIBLE, ANY SUPERELEVATION TRANSITIONS SHOULD BE COMPLETED OUTSIDE THE LIMITS OF THE BRIDGE, INCLUDING THE LIMITS OF SLEEPER SLAB.
7. IT IS DELDOT'S PREFERENCE TO PAY FOR THE SLEEPER SLAB UNDER ITEM 610016 - PORTLAND CEMENT CONCRETE MASONRY, CLASS D.

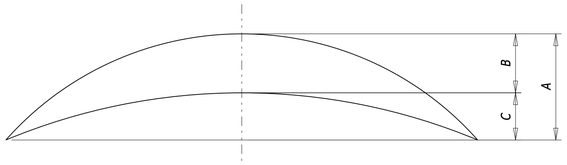

A = ESTIMATED PRESTRESS CAMBER LESS DEFLECTION DUE TO DEAD LOAD OF BEAM TIMES CREEP.
B = DEFLECTION DUE TO DEAD LOAD OF (SLAB or OVERLAY) AND PARAPET.
C = A - B = NET CAMBER.

CAMBER DIAGRAM

See Designer Note 3

CAMBER (INCHES)

SPAN	A	B	C	SPAN	A	B	C
SX-GX	----	----	----	SX-GX	----	----	----
SX-GX	----	----	----	SX-GX	----	----	----
SX-GX	----	----	----	SX-GX	----	----	----
SX-GX	----	----	----	SX-GX	----	----	----
SX-GX	----	----	----	SX-GX	----	----	----
SX-GX	----	----	----	SX-GX	----	----	----
SX-GX	----	----	----	SX-GX	----	----	----
SX-GX	----	----	----	SX-GX	----	----	----
SX-GX	----	----	----	SX-GX	----	----	----
SX-GX	----	----	----	SX-GX	----	----	----
SX-GX	----	----	----	SX-GX	----	----	----
SX-GX	----	----	----	SX-GX	----	----	----
SX-GX	----	----	----	SX-GX	----	----	----
SX-GX	----	----	----	SX-GX	----	----	----
SX-GX	----	----	----	SX-GX	----	----	----
SX-GX	----	----	----	SX-GX	----	----	----
SX-GX	----	----	----	SX-GX	----	----	----
SX-GX	----	----	----	SX-GX	----	----	----

NOTE:
'S' DENOTES SPAN
'G' DENOTES GIRDER

DESIGNER NOTES

1. REFER TO SECTIONS 106.9.9 AND 205.7.3.6 FOR MORE INFORMATION ON CAMBER OF PRESTRESSED CONCRETE BEAMS.
2. REFER TO SECTION 612.03(E) IN THE STANDARD SPECIFICATIONS TO DETERMINE IF THERE IS ANY NEED TO ADD PROJECT-SPECIFIC BEAM NOTES ON BEAM DETAIL SHEETS NOT INCLUDED IN SECTION 612.03(E).
3. CAMBER DIAGRAM AND CAMBER TABLE ARE REQUIRED TO BE SHOWN ON THE PRESTRESSED CONCRETE BEAM PLAN SHEETS. THE CAMBER TABLE SHOWN ON THIS SHEET IS A RECOMMENDED EXAMPLE TO USE. FOR SMALLER AND NON-COMPLEX PROJECTS, THE DESIGNER MAY CONSIDER USING ONLY CAMBER DIAGRAM.
4. REFER TO DETAIL NO. 330.02 FOR MORE INFORMATION ON THE SHEAR KEY CONNECTION AND FILL PORTS FOR ADJACENT BOX BEAMS AND SLAB BEAMS.
5. REFER TO DETAIL NO. 330.03 FOR MORE INFORMATION ON FLANGE CONNECTOR DETAILS BETWEEN NEXT BEAMS.
6. REFER TO DETAIL NO. 330.04 FOR MORE INFORMATION ON INTERMEDIATE DIAPHRAGMS BETWEEN PCEF BEAMS.
7. REFER TO SECTION 106.9.3 FOR MORE INFORMATION ON INTERMEDIATE DIAPHRAGM SPACINGS TO USE.
8. EXAMPLE USED IN FRAMING PLAN ASSUMES A TWO-SPAN BRIDGE WITH SKEWED LEFT-MOST ABUTMENT AND PIER/RIGHT-MOST ABUTMENT WITH A ZERO SKEW.

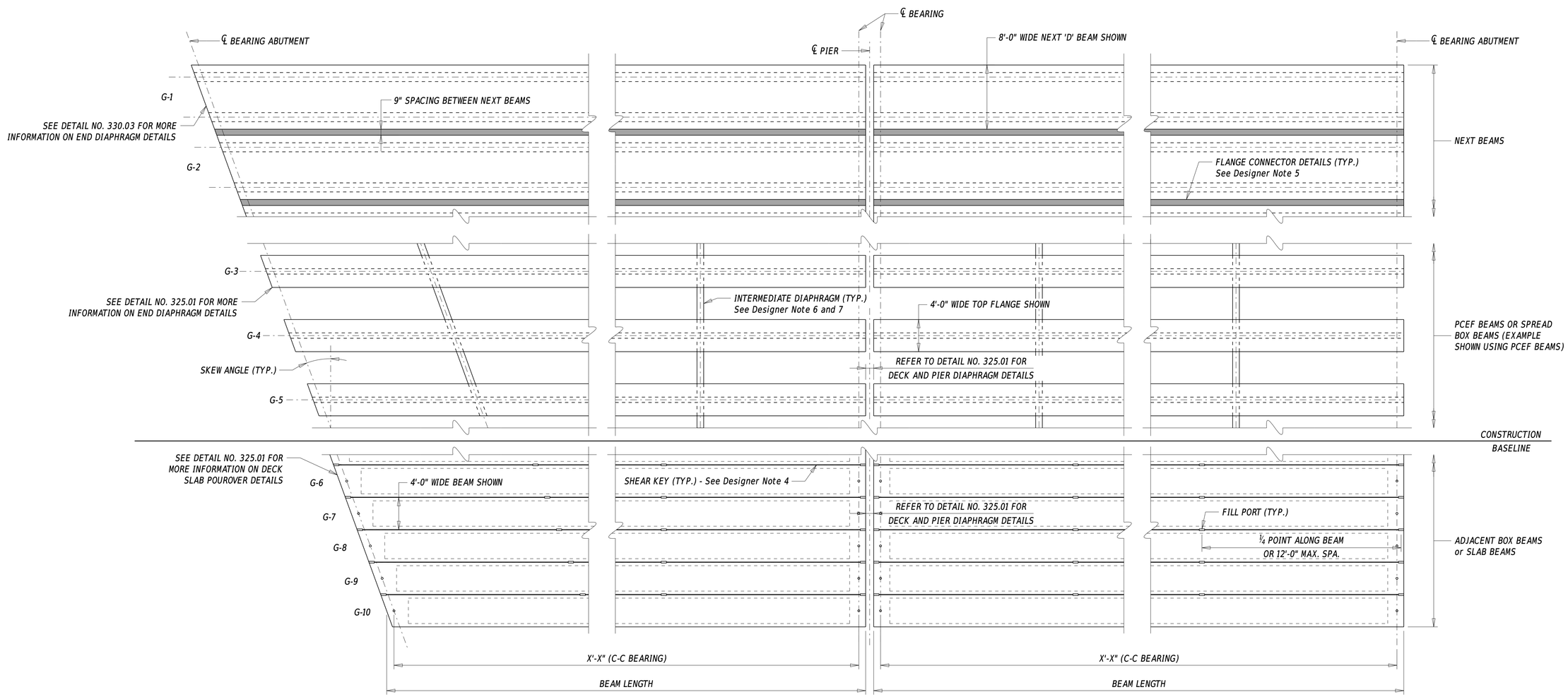

FRAMING PLAN

DELAWARE DEPARTMENT OF TRANSPORTATION BRIDGE DESIGN MANUAL	PRESTRESSED CONCRETE BEAM FRAMING PLAN AND CAMBER DETAILS	NOT TO SCALE	ISSUE DATE 10/01/2015 10/01/2017	DETAIL No. 330.01 SHEET No. 1 of 1

NOTE: LEGEND TO BE ADDED ON PLAN SHEETS MUST SHOW THE FOLLOWING (See Designer Note 2):

- ○ = 0.5" or 0.6" DIA., 270 ksi PRESTRESSING STRANDS
- ◉ = 0.5" or 0.6" DIA., 270 ksi PRESTRESSING STRANDS TO BE EXTENDED INTO THE PIER or DECK SLAB POUROVER
- ▣ = 0.5" or 0.6" DIA., 270 ksi PRESTRESSING STRANDS TO BE DEBONDED AT X'-X" @ EACH END
- ◬ = 0.5" or 0.6" DIA., 270 ksi PRESTRESSING STRANDS TO BE DEBONDED AT X'-X" @ EACH END (if more than one debonded length is required)

NOTE: NO STRANDS SHOWN FOR CLARITY, + = DENOTES AVAILABLE LOCATIONS FOR STRAND PLACEMENT. POTENTIAL BARRIER REINFORCEMENT NOT SHOWN FOR CLARITY. IF BARRIER REINFORCEMENT IS REQUIRED, DETAILS FOR THE BARRIER REINFORCEMENT MUST BE ADDED TO THE BEAM SECTION AND ELEVATION VIEWS AND BE INCLUDED IN THE BEAM REINFORCING BAR LIST.

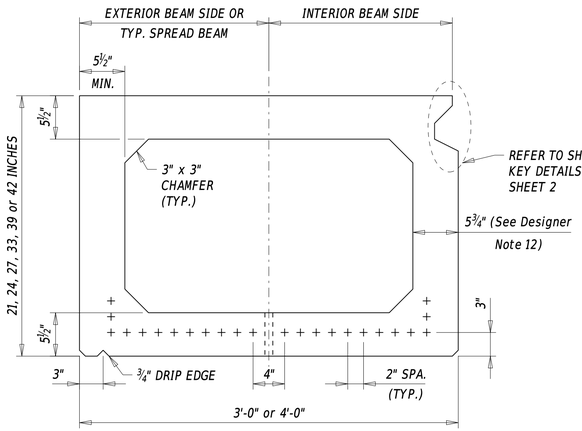

BOX BEAM STRAND CONFIGURATION

NOTE: EXAMPLE SHOWN USING 4'-0" WIDE BEAM.

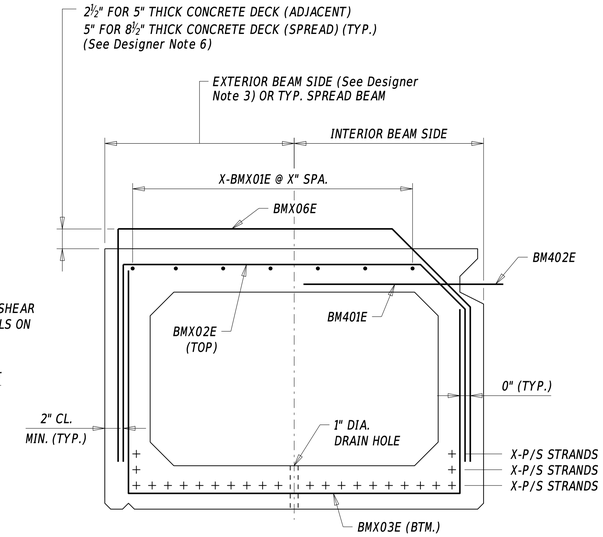

BOX BEAM REINFORCEMENT SECTION

NOTE: BMX06E REINFORCEMENT NOT REQUIRED IF CONCRETE DECK IS NOT USED. TOP LONGITUDINAL BARS (BMX01E) MAY BE PLACED ON TOP OR OUTSIDE OF BMX02E TO MEET DESIGN REQUIREMENTS.

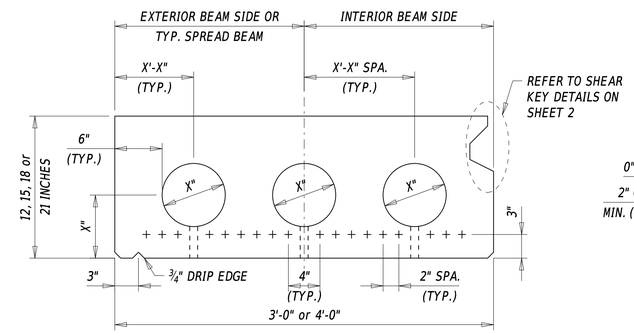

SLAB BEAM STRAND CONFIGURATION

NOTE: EXAMPLE SHOWN USING 4'-0" WIDE BEAM WITH HEIGHT OF 18" UTILIZING 3 CIRCULAR VOIDS. 3'-0" WIDE BEAMS ONLY REQUIRE TWO CIRCULAR VOIDS. THE DESIGNER MAY CONSIDER ELIMINATING VOIDS IN BEAMS WITH HEIGHTS OF 18" OR 21" IF NECESSARY. EXTERIOR CIRCULAR VOID IN EXTERIOR BEAM MAY BE REMOVED TO ACCOMMODATE PROTRUDING BARS FOR BARRIERS. IT IS RECOMMENDED THAT CIRCULAR VOIDS HAVE A DIAMETER OF 8 INCHES. BEAMS WITH HEIGHTS OF 12" AND 15" WILL BE SOLID SLABS (NO VOIDS).

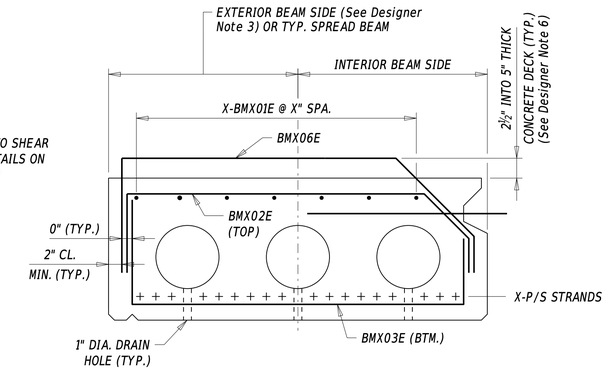

SLAB BEAM REINFORCEMENT SECTION

NOTE: FOR SOLID SLABS, BMX03E AND BMX06E REINFORCEMENT SHOULD BE COMBINED INTO ONE BAR BEND IN ORDER TO REDUCE REBAR CONGESTION. BMX06E REINFORCEMENT NOT REQUIRED IF CONCRETE DECK IS NOT USED. TOP LONGITUDINAL BARS (BMX01E) MAY BE PLACED ON TOP OR OUTSIDE OF BMX02E TO MEET DESIGN REQUIREMENTS.

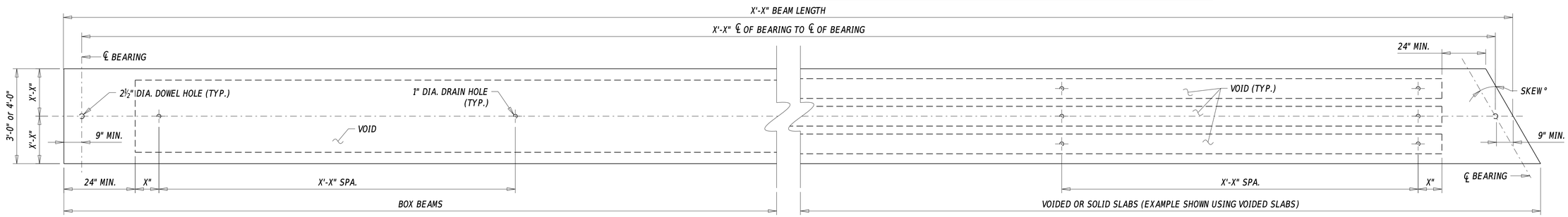

PLAN VIEW

NOTE: SHEAR KEY FOR ADJACENT BEAMS NOT SHOWN FOR CLARITY. REFER TO SHEET 2 FOR SHEAR KEY DETAILS.

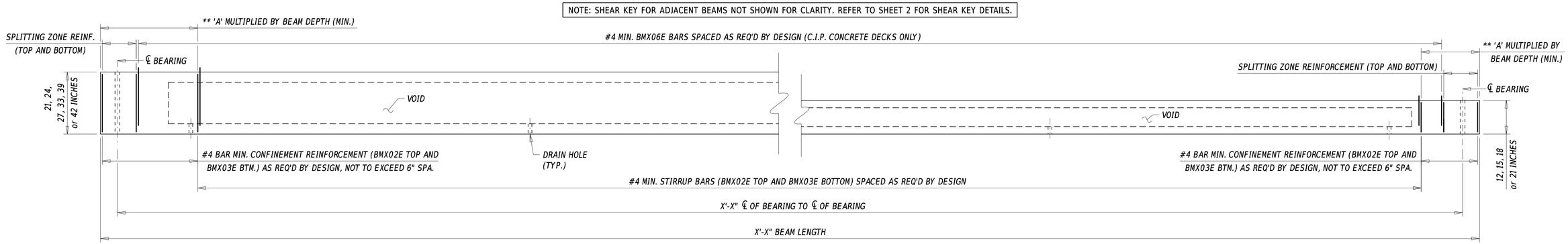

** CONFINEMENT ZONE
'A' = 1.5 FOR 0.5" DIA. STRANDS
'A' = 2.0 FOR 0.6" DIA. STRANDS

ELEVATION

NOTE: BMX01E BARS NOT SHOWN FOR CLARITY.

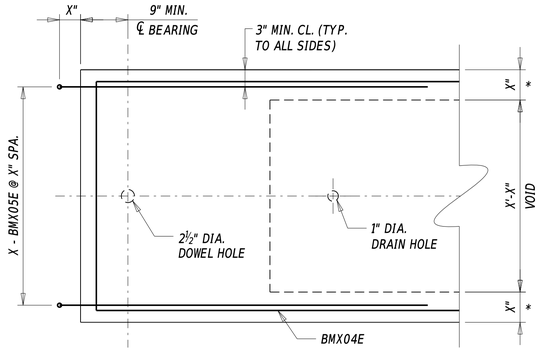

TYPICAL BOX BEAM END PLAN

with protruding bars

NOTE: EXAMPLE SHOWN USING 4'-0" WIDE BEAM.

* REFER TO 'BOX BEAM STRAND CONFIGURATION' ON SHEET 1 FOR MORE INFORMATION.

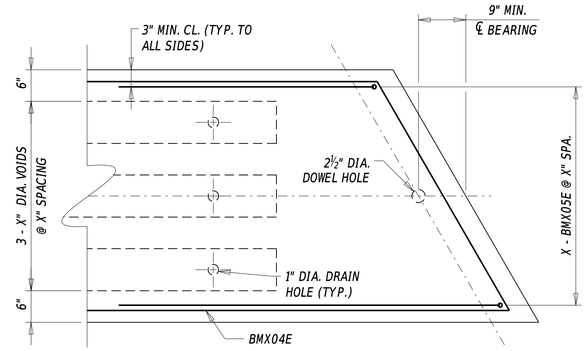

TYPICAL SLAB BEAM END PLAN

without protruding bars

NOTE: EXAMPLE SHOWN USING 4'-0" WIDE BEAM WITH THREE 0'-8" CIRCULAR VOIDS.

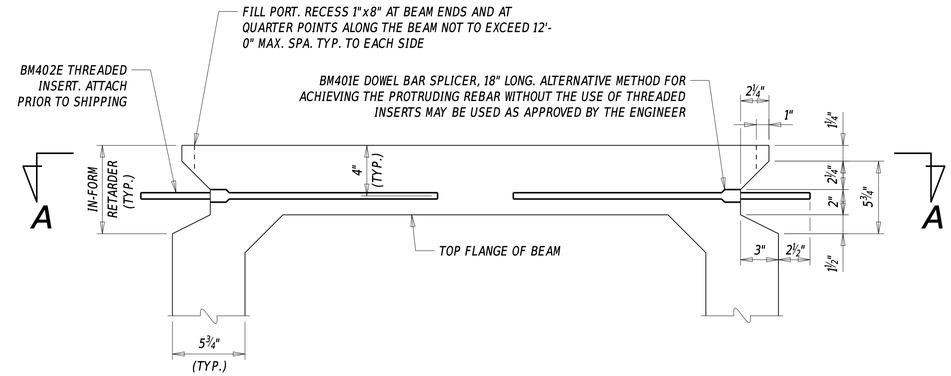

SHEAR KEY SECTION

NOTE: BM401E AND BM402E BARS ARE SHOWN WITHIN THE SAME PLANE FOR THE PURPOSE OF THIS DETAIL ONLY. REFER TO TYPICAL ADJACENT BEAM PLAN DETAILS ON THIS SHEET FOR BAR SPACING. EXAMPLE SHOWN USING BOX BEAM.

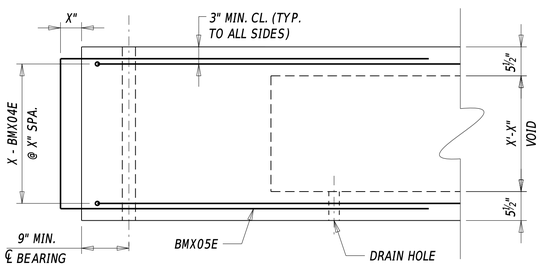

TYPICAL BOX BEAM END ELEVATION

with protruding bars

NOTE: PROTRUDING BAR USED IN DIAPHRAM AND/OR DECK OVERPOUR.

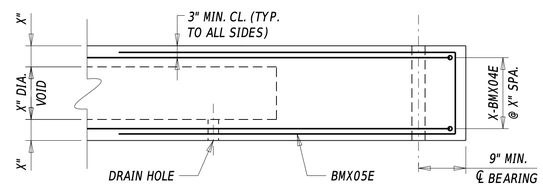

TYPICAL SLAB BEAM END ELEVATION

without protruding bars

NOTE: EXAMPLE SHOWN USING VOIDED SLAB BEAM.

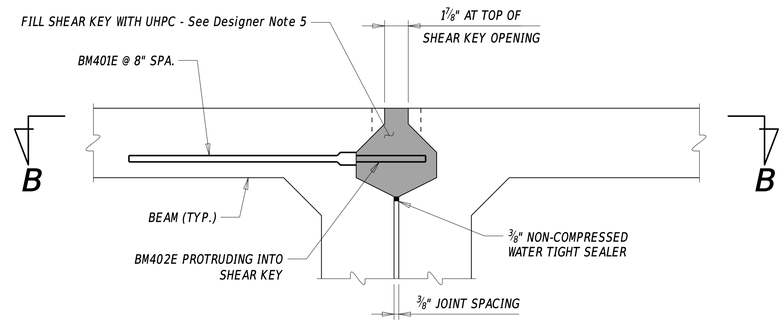

SHEAR KEY DETAIL

NOTE: EXAMPLE SHOWN USING BOX BEAM.

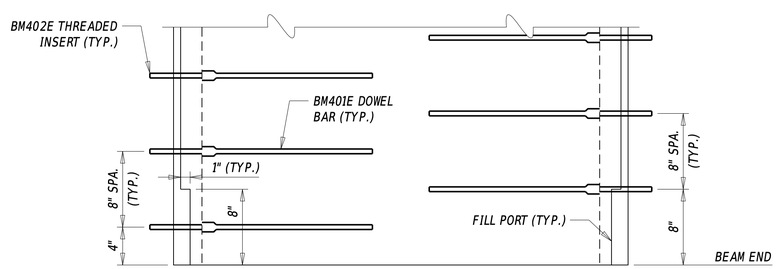

TYPICAL ADJACENT BEAM PLAN (SECTION A-A)

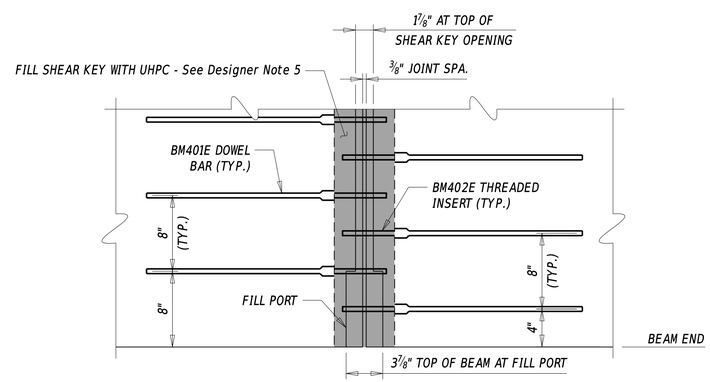

TYPICAL ADJACENT BEAM JOINT PLAN (SECTION B-B)

SHEAR KEY NOTES

1. TO CREATE AN EXPOSED AGGREGATE SURFACE WITHIN THE SHEAR KEY, APPLY AN IN-FORM RETARDER FROM THE TOP OF BEAM TO BOTTOM OF THE SHEAR KEY ALONG THE FULL LENGTH OF BEAM ON BOTH SIDES. DO NOT ALLOW STAINS FROM OIL, GREASE OR OTHER CONTAMINATES TO BE PRESENT WITHIN THE SHEAR KEY. OMIT THE SHEAR KEY DETAIL, IN-FORM RETARDER, AND BM401E AND BM402E BARS ON THE EXTERIOR FACE OF THE FASCIA BEAMS.
2. INSTALL THE BM402E BARS PRIOR TO DELIVERING BEAMS TO THE CONSTRUCTION SITE. AN ALTERNATIVE METHOD TO THREADED BM402E BAR PROTRUDING INTO THE SHEAR KEY SPACE MAY BE SUBMITTED FOR APPROVAL BY THE ENGINEER.
3. STAGGER THE BM401E AND BM402E BARS ACCORDING TO THE DETAILS PROVIDED ON THIS SHEET TO FORM A NON-CONTACT LAP SPLICE ALONG THE LENGTH OF THE SHEAR KEY.
4. TO CREATE A FILL PORT, RECESS THE SHEAR KEY 1" x 8". PLACE THE FILL PORTS AT BEAM ENDS AND AT A SPACING EQUAL TO THE LESSER OF QUARTER POINTS ALONG THE BEAM OR 12'-0".
5. VALUE ENGINEERING PROPOSALS ELIMINATING THE USE OF UHPC WILL NOT BE CONSIDERED.

REINFORCING BAR LIST

STRAIGHT BARS				BENT BARS			
MARK	SIZE	QTY.	LENGTH	MARK	SIZE	QTY.	LENGTH
BM401E	4	----	1'-6"	BMX02E	----	----	----
BM402E	4	----	5½"	BMX03E	----	----	----
BMX01E	----	----	----	BMX04E	----	----	----
----	----	----	----	BMX05E	----	----	----
----	----	----	----	BMX06E	----	----	----

BENDING DIAGRAMS

ALL DIMENSIONS ARE FROM OUT TO OUT. DIAGRAMS ARE NOT TO SCALE.

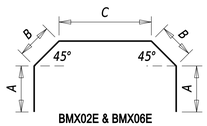

BMX02E & BMX06E
(TYP. INTERIOR BEAMS)

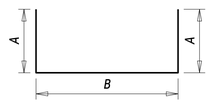

BMX03E
(TYP. INTERIOR AND SPREAD BEAMS)

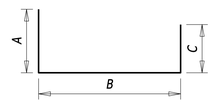

BMX03E
(TYP. EXTERIOR BEAMS)

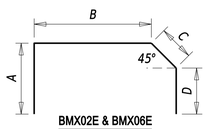

BMX02E & BMX06E
(TYP. EXTERIOR BEAMS)

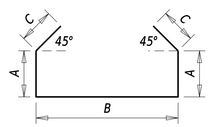

BMX03E
(TYP. INTERIOR 12" AND 15" THICK SOLID SLAB BEAMS)

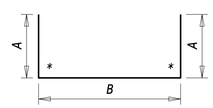

BMX04E AND BMX05E
** SPECIFY ANGLES IF ENDS OF BEAMS ARE SKEWED.*

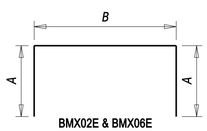

BMX02E & BMX06E
(TYP. SPREAD BEAMS)

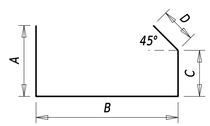

BMX03E
(TYP. EXTERIOR 12" AND 15" THICK SOLID SLAB BEAMS)

DESIGNER NOTES

1. REFER TO SECTION 106.9 FOR MORE INFORMATION ON THE DESIGN AND DETAILING OF PRESTRESSED CONCRETE BOX AND SLAB BEAMS. ALSO REFER TO SECTION 103.4.1.2 FOR MORE INFORMATION ON WHEN USE OF BOX OR SLAB BEAM IS APPROPRIATE.
2. FOR MORE INFORMATION ON ALLOWABLE PRESTRESSING STRAND TYPE AND SIZES, REFER TO SECTION 205.4.4.
3. REINFORCEMENT FOR BARRIERS TO BE CAST WITH PRESTRESSED CONCRETE BOX AND SLAB BEAMS NOT SHOWN FOR CLARITY. REFER TO DETAIL NO. 325.02 - 'BRIDGE RAILING DETAILS' FOR MORE INFORMATION.
4. THE PRESTRESSED CONCRETE BOX AND SLAB BEAM SECTIONS AND STRAND CONFIGURATION AS SHOWN IN THESE DETAILS ARE RECOMMENDED. IF THE DESIGNER IS CONSIDERING USING DIFFERENT STRAND PATTERNS OR CREATING NON-SYMMETRICAL SECTIONS, NOTE THAT THE FABRICATION COSTS WILL LIKELY INCREASE SIGNIFICANTLY.
5. THE DEPARTMENT PREFERS THE USE OF ULTRA HIGH PERFORMANCE CONCRETE (UHPC) TO CONNECT ADJACENT BEAMS. THE DETAILS PROVIDED HEREIN DEPICT TYPICAL DETAILS FOR UHPC SHEAR KEY CONNECTIONS DEVELOPED AND TESTED BY FHWA. APPROVAL MUST BE OBTAINED FROM THE BRIDGE DESIGN ENGINEER TO UTILIZE AN ALTERNATIVE METHOD OF CONNECTING ADJACENT BEAMS.
6. THE DETAILS SHOWN ASSUME THAT 5" THICK CONCRETE DECK ON ADJACENT BEAMS WILL BE USED. HOWEVER, IN CONJUNCTION WITH UHPC SHEAR KEY CONNECTIONS, A C.I.P. DECK MAY NOT BE NECESSARY AND IS NOT PREFERRED. INSTEAD THE DESIGNER SHOULD CONSIDER AN OVERLAY, BITUMINOUS CONCRETE WEARING SURFACE, OR ALLOWING THE TOP FLANGE TO BECOME THE RIDING SURFACE. THE DESIGNER IS RESPONSIBLE FOR MODIFYING THE DETAILS HEREIN AS NECESSARY IF A 5" THICK CONCRETE DECK IS NOT UTILIZED.
7. THE DESIGNER SHOULD NOTE ON THE PLANS THE TOTAL NUMBER OF INTERIOR AND EXTERIOR BEAMS NEEDED FOR THE PROJECT AND THE ESTIMATED WEIGHT OF THE BEAMS.
8. DETAILS FOR STAY-IN-PLACE FORMS, DECK SLAB DETAIL AT PIER, AND DECK SLAB POUROVER AT ABUTMENT CAN BE FOUND IN DETAIL NO. 325.01 - CONCRETE DECK DETAILS.
9. ENSURE WORKING DRAWINGS MEET ALL REQUIREMENTS AS OUTLINED IN SECTION 612.03(B)&(E) OF THE DELDOT STANDARD SPECIFICATIONS.
10. THIS DETAIL DOES NOT SHOW POTENTIAL PRESTRESSING STRANDS EXTENDING INTO PIER DIAPHRAGM OR DECK SLAB POUROVER FOR CLARITY. IF REQUIRED PER DESIGN, REFER TO A5.12.3.3.9 FOR MORE INFORMATION ON DESIGN AND DETAILING FOR EXTENDING OF PRESTRESSING STRANDS INTO PIER DIAPHRAGM OR DECK SLAB POUROVER.
11. THE DESIGNER MUST CONSIDER THE DIFFERENCES IN DECK THICKNESS BETWEEN CENTERLINE OF BEARINGS AND POINT OF MINIMUM THICKNESS ALONG THE BEAM DUE TO THE DIFFERENCE IN THE PROFILE TO CAMBERED SHAPE OF THE PRESTRESSED CONCRETE ADJACENT BOX AND SLAB BEAMS. THE FINAL GRADES AND SUBSTRUCTURE ELEVATIONS MUST BE ADJUSTED ACCORDINGLY.
12. WHEN DEVELOPING THE UHPC SHEAR KEY DETAILS, FHWA SUCCESSFULLY TESTED BOX BEAMS WITH 5 ½" THICK WALLS. DELDOT HAS INCREASED THE PREFERRED BOX BEAM WALL THICKNESS TO 5¾" TO ALLOW FOR GREATER COVER OF REINFORCEMENT. IF THE DESIGNER PROPOSES TO USE 5½" THICK WALLS WITH UHPC SHEAR KEY DETAILS, THE DESIGNER MUST VERIFY THE REINFORCEMENT CLEARANCE.
13. THE DESIGNER MUST EVALUATE THE NEED FOR INTERNAL DIAPHRAGM(S) IN BOX BEAMS OR VOIDED SLABS FOR STABILITY DURING TRANSPORTATION.

NOTE: ALL REINFORCEMENT FOR THE BOX or SLAB BEAM IS INCLUDED IN ITEM (insert appropriate beam item number). THE REINFORCING BAR LIST AND BENDING DIAGRAMS MUST BE SHOWN ON THE BOX or SLAB BEAM SHEETS AND BE SEPARATE FROM THE BRIDGE REINFORCEMENT BAR SHEET.

NOTE: THE DIMENSIONS ON THIS SHEET ARE RECOMMENDED. THE DESIGNER IS STILL RESPONSIBLE FOR ENSURING THAT THE DIMENSIONS SHOWN ON PLANS ARE ACCURATE AND PROJECT-SPECIFIC. DIMENSIONS FOR BMX06E ARE BASED ON 5" THICK CONCRETE DECK. REDUCE 'A' DIMENSION FOR BMX06E AS NECESSARY TO REDUCE CONGESTION IF MULTIPLE ROWS OF STRANDS WILL BE USED. IF PREFERRED, BMX06E BARS MAY BE COMBINED INTO ONE CONTINUOUS BAR BEND.

			DEPTH OF BOX BEAM																	
MARK	WIDTH	LETTER	21"(I)	21"(E)	21"(S)	24"(I)	24"(E)	24"(S)	27"(I)	27"(E)	27"(S)	33"(I)	33"(E)	33"(S)	39"(I)	39"(E)	39"(S)	42"(I)	42"(E)	42"(S)
BMX02E	36"	A	0'-7"	1'-1"	1'-1"	0'-10"	1'-4"	1'-4"	1'-1"	1'-7"	1'-7"	1'-7"	2'-1"	2'-1"	2'-1"	2'-7"	2'-7"	2'-4"	2'-10"	2'-10"
		B	0'-8"	2'-2"	2'-8"	0'-8"	2'-2"	2'-8"	0'-8"	2'-2"	2'-8"	0'-8"	2'-2"	2'-8"	0'-8"	2'-2"	2'-8"	0'-8"	2'-2"	2'-8"
		C	1'-8½"	0'-8"	----	1'-8½"	0'-8"	----	1'-8½"	0'-8"	----	1'-8½"	0'-8"	----	1'-8½"	0'-8"	----	1'-8½"	0'-8"	----
		D	----	0'-11"	----	----	1'-2"	----	----	1'-5"	----	----	1'-11"	----	----	2'-5"	----	----	2'-8"	----
	48"	A	0'-7"	1'-1"	1'-1"	0'-10"	1'-4"	1'-4"	1'-1"	1'-7"	1'-7"	1'-7"	2'-1"	2'-1"	2'-1"	2'-7"	2'-7"	2'-4"	2'-10"	2'-10"
		B	0'-8"	3'-2"	3'-8"	0'-8"	3'-2"	3'-8"	0'-8"	3'-2"	3'-8"	0'-8"	3'-2"	3'-8"	0'-8"	3'-2"	3'-8"	0'-8"	3'-2"	3'-8"
		C	2'-8½"	0'-8"	----	2'-8½"	0'-8"	----	2'-8½"	0'-8"	----	2'-8½"	0'-8"	----	2'-8½"	0'-8"	----	2'-8½"	0'-8"	----
		D	----	0'-11"	----	----	1'-2"	----	----	1'-5"	----	----	1'-11"	----	----	2'-5"	----	----	2'-8"	----
BMX03E	36"	A	0'-11"	1'-5"	1'-5"	1'-2"	1'-8"	1'-8"	1'-5"	1'-11"	1'-11"	1'-11"	2'-5"	2'-5"	2'-5"	2'-11"	2'-11"	2'-8"	3'-2"	3'-2"
		B	2'-8"	2'-8"	2'-8"	2'-8"	2'-8"	2'-8"	2'-8"	2'-8"	2'-8"	2'-8"	2'-8"	2'-8"	2'-8"	2'-8"	2'-8"	2'-8"	2'-8"	2'-8"
		C	----	0'-11"	----	----	1'-2"	----	----	1'-5"	----	----	1'-11"	----	----	2'-5"	----	----	2'-8"	----
		D	----	----	----	----	----	----	----	----	----	----	----	----	----	----	----	----	----	----
	48"	A	0'-11"	1'-5"	1'-5"	1'-2"	1'-8"	1'-8"	1'-5"	1'-11"	1'-11"	1'-11"	2'-5"	2'-5"	2'-5"	2'-11"	2'-11"	2'-8"	3'-2"	3'-2"
		B	3'-8"	3'-8"	3'-8"	3'-8"	3'-8"	3'-8"	3'-8"	3'-8"	3'-8"	3'-8"	3'-8"	3'-8"	3'-8"	3'-8"	3'-8"	3'-8"	3'-8"	3'-8"
		C	----	0'-11"	----	----	1'-2"	----	----	1'-5"	----	----	1'-11"	----	----	2'-5"	----	----	2'-8"	----
		D	----	----	----	----	----	----	----	----	----	----	----	----	----	----	----	----	----	----
BMX04E	36"	A	5'-9"	5'-9"	5'-9"	5'-9"	5'-9"	5'-9"	5'-9"	5'-9"	5'-9"	5'-9"	5'-9"	5'-9"	5'-9"	5'-9"	5'-9"	5'-9"	5'-9"	5'-9"
		B	2'-6"	2'-6"	2'-6"	2'-6"	2'-6"	2'-6"	2'-6"	2'-6"	2'-6"	2'-6"	2'-6"	2'-6"	2'-6"	2'-6"	2'-6"	2'-6"	2'-6"	2'-6"
	48"	A	5'-9"	5'-9"	5'-9"	5'-9"	5'-9"	5'-9"	5'-9"	5'-9"	5'-9"	5'-9"	5'-9"	5'-9"	5'-9"	5'-9"	5'-9"	5'-9"	5'-9"	5'-9"
		B	3'-6"	3'-6"	3'-6"	3'-6"	3'-6"	3'-6"	3'-6"	3'-6"	3'-6"	3'-6"	3'-6"	3'-6"	3'-6"	3'-6"	3'-6"	3'-6"	3'-6"	3'-6"
BMX05E	36"	A	5'-9"	5'-9"	5'-9"	5'-9"	5'-9"	5'-9"	5'-9"	5'-9"	5'-9"	5'-9"	5'-9"	5'-9"	5'-9"	5'-9"	5'-9"	5'-9"	5'-9"	5'-9"
		B	1'-3"	1'-3"	1'-3"	1'-6"	1'-6"	1'-6"	1'-9"	1'-9"	1'-9"	2'-3"	2'-3"	2'-3"	2'-9"	2'-9"	2'-9"	3'-0"	3'-0"	3'-0"
	48"	A	5'-9"	5'-9"	5'-9"	5'-9"	5'-9"	5'-9"	5'-9"	5'-9"	5'-9"	5'-9"	5'-9"	5'-9"	5'-9"	5'-9"	5'-9"	5'-9"	5'-9"	5'-9"
		B	1'-3"	1'-3"	1'-3"	1'-6"	1'-6"	1'-6"	1'-9"	1'-9"	1'-9"	2'-3"	2'-3"	2'-3"	2'-9"	2'-9"	2'-9"	3'-0"	3'-0"	3'-0"
BMX06E	36"	A	0'-7"	1'-5½"	1'-5½"	0'-10"	1'-8½"	1'-8½"	1'-1"	1'-11½"	1'-11½"	1'-7"	2'-5½"	2'-5½"	2'-1"	2'-11½"	2'-11½"	2'-4"	3'-2½"	3'-2½"
		B	1'-2"	1'-9½"	2'-8"	1'-2"	1'-9½"	2'-8"	1'-2"	1'-9½"	2'-8"	1'-2"	1'-9½"	2'-8"	1'-2"	1'-9½"	2'-8"	1'-2"	1'-9½"	2'-8"
		C	1'-0"	1'-2"	----	1'-0"	1'-2"	----	1'-0"	1'-2"	----	1'-0"	1'-2"	----	1'-0"	1'-2"	----	1'-0"	1'-2"	----
		D	----	0'-11"	----	----	1'-2"	----	----	1'-5"	----	----	1'-11"	----	----	2'-5"	----	----	2'-8"	----
	48"	A	0'-7"	1'-5½"	1'-5½"	0'-10"	1'-8½"	1'-8½"	1'-1"	1'-11½"	1'-11½"	1'-7"	2'-5½"	2'-5½"	2'-1"	2'-11½"	2'-11½"	2'-4"	3'-2½"	3'-2½"
		B	1'-2"	2'-9½"	3'-8"	1'-2"	2'-9½"	3'-8"	1'-2"	2'-9½"	3'-8"	1'-2"	2'-9½"	3'-8"	1'-2"	2'-9½"	3'-8"	1'-2"	2'-9½"	3'-8"
		C	2'-0"	1'-2"	----	2'-0"	1'-2"	----	2'-0"	1'-2"	----	2'-0"	1'-2"	----	2'-0"	1'-2"	----	2'-0"	1'-2"	----
		D	----	0'-11"	----	----	1'-2"	----	----	1'-5"	----	----	1'-11"	----	----	2'-5"	----	----	2'-8"	----

			DEPTH OF SLAB BEAM											
MARK	WIDTH	LETTER	12"(I)	12"(E)	12"(S)	15"(I)	15"(E)	15"(S)	18"(I)	18"(E)	18"(S)	21"(I)	21"(E)	21"(S)
BMX02E	36"	A	0'-2½"	0'-8"	0'-8"	0'-5½"	0'-11"	0'-11"	0'-4"	0'-10"	0'-10"	0'-7"	1'-1"	1'-1"
		B	0'-8"	2'-2"	2'-8"	0'-8"	2'-2"	2'-8"	0'-8"	2'-2"	2'-8"	0'-8"	2'-2"	2'-8"
		C	1'-8½"	0'-8"	----	1'-8½"	0'-8"	----	1'-8½"	0'-8"	----	1'-8½"	0'-8"	----
		D	----	0'-2½"	----	----	0'-5½"	----	----	0'-8"	----	----	0'-11"	----
	48"	A	0'-2½"	0'-8"	0'-8"	0'-5½"	0'-11"	0'-11"	0'-4"	0'-10"	0'-10"	0'-7"	1'-1"	1'-1"
		B	0'-8"	3'-2"	3'-8"	0'-8"	3'-2"	3'-8"	0'-8"	3'-2"	3'-8"	0'-8"	3'-2"	3'-8"
		C	2'-8½"	0'-8"	----	2'-8½"	0'-8"	----	2'-8½"	0'-8"	----	2'-8½"	0'-8"	----
		D	----	0'-2½"	----	----	0'-5½"	----	----	0'-8"	----	----	0'-11"	----
BMX03E	36"	A	0'-2½"	0'-8"	0'-8"	0'-5½"	0'-11"	0'-11"	0'-8"	1'-2"	1'-2"	0'-11"	1'-5"	1'-5"
		B	2'-8"	2'-8"	2'-8"	2'-8"	2'-8"	2'-8"	2'-8"	2'-8"	2'-8"	2'-8"	2'-8"	2'-8"
		C	0'-8"	0'-2½"	----	0'-8"	0'-5½"	----	----	0'-8"	----	----	0'-11"	----
		D	----	0'-8"	----	----	0'-8"	----	----	----	----	----	----	----
	48"	A	0'-2½"	0'-8"	0'-8"	0'-5½"	0'-11"	0'-11"	0'-8"	1'-2"	1'-2"	0'-11"	1'-5"	1'-5"
		B	3'-8"	3'-8"	3'-8"	3'-8"	3'-8"	3'-8"	3'-8"	3'-8"	3'-8"	3'-8"	3'-8"	3'-8"
		C	0'-8"	0'-2½"	----	0'-8"	0'-5½"	----	----	0'-8"	----	----	0'-11"	----
		D	----	0'-8"	----	----	0'-8"	----	----	----	----	----	----	----
BMX04E	36"	A	5'-9"	5'-9"	5'-9"	5'-9"	5'-9"	5'-9"	5'-9"	5'-9"	5'-9"	5'-9"	5'-9"	5'-9"
		B	2'-6"	2'-6"	2'-6"	2'-6"	2'-6"	2'-6"	2'-6"	2'-6"	2'-6"	2'-6"	2'-6"	2'-6"
	48"	A	5'-9"	5'-9"	5'-9"	5'-9"	5'-9"	5'-9"	5'-9"	5'-9"	5'-9"	5'-9"	5'-9"	5'-9"
		B	3'-6"	3'-6"	3'-6"	3'-6"	3'-6"	3'-6"	3'-6"	3'-6"	3'-6"	3'-6"	3'-6"	3'-6"
BMX05E	36"	A	5'-9"	5'-9"	5'-9"	5'-9"	5'-9"	5'-9"	5'-9"	5'-9"	5'-9"	5'-9"	5'-9"	5'-9"
		B	0'-6"	0'-6"	0'-6"	0'-9"	0'-9"	0'-9"	1'-0"	1'-0"	1'-0"	1'-3"	1'-3"	1'-3"
	48"	A	5'-9"	5'-9"	5'-9"	5'-9"	5'-9"	5'-9"	5'-9"	5'-9"	5'-9"	5'-9"	5'-9"	5'-9"
		B	0'-6"	0'-6"	0'-6"	0'-9"	0'-9"	0'-9"	1'-0"	1'-0"	1'-0"	1'-3"	1'-3"	1'-3"
BMX06E	36"	A	0'-2½"	1'-0½"	1'-0½"	0'-5½"	1'-3½"	1'-3½"	0'-4"	1'-2½"	1'-2½"	0'-7"	1'-5½"	1'-5½"
		B	1'-2"	1'-9½"	2'-8"	1'-2"	1'-9½"	2'-8"	1'-2"	1'-9½"	2'-8"	1'-2"	1'-9½"	2'-8"
		C	1'-0"	1'-2"	----	1'-0"	1'-2"	----	1'-0"	1'-2"	----	1'-0"	1'-2"	----
		D	----	0'-2½"	----	----	0'-5½"	----	----	0'-8"	----	----	0'-11"	----
	48"	A	0'-2½"	1'-0½"	1'-0½"	0'-5½"	1'-3½"	1'-3½"	0'-4"	1'-2½"	1'-2½"	0'-7"	1'-5½"	1'-5½"
		B	1'-2"	2'-9½"	3'-8"	1'-2"	2'-9½"	3'-8"	1'-2"	2'-9½"	3'-8"	1'-2"	2'-9½"	3'-8"
		C	2'-0"	1'-2"	----	2'-0"	1'-2"	----	2'-0"	1'-2"	----	2'-0"	1'-2"	----
		D	----	0'-2½"	----	----	0'-5½"	----	----	0'-8"	----	----	0'-11"	----

NOTE: (I) DENOTES INTERIOR BEAMS
(E) DENOTES EXTERIOR BEAMS
(S) DENOTES SPREAD BEAMS

NOTE: LEGEND TO BE ADDED ON PLAN SHEETS MUST SHOW THE FOLLOWING (see Designer Note 7):

- ○ = 0.6" DIA., 270 ksi PRESTRESSING STRANDS
- ⦿ = 0.6" DIA., 270 ksi PRESTRESSING STRANDS TO BE EXTENDED INTO THE PIER OR END DIAPHRAGM
- ▣ = 0.6" DIA., 270 ksi PRESTRESSING STRANDS TO BE DEBONDED AT X'-X" @ EACH END
- ◬ = 0.6" DIA., 270 ksi PRESTRESSING STRANDS TO BE DEBONDED AT X'-X" @ EACH END (if more than one debonded length is required)

NOTE: NO STRANDS SHOWN FOR CLARITY, + = DENOTES AVAILABLE LOCATIONS FOR STRAND PLACEMENT. POTENTIAL BARRIER REINFORCEMENT NOT SHOWN FOR CLARITY, BUT MUST BE SHOWN IN REINFORCING BAR LIST AND BENDING DIAGRAMS.

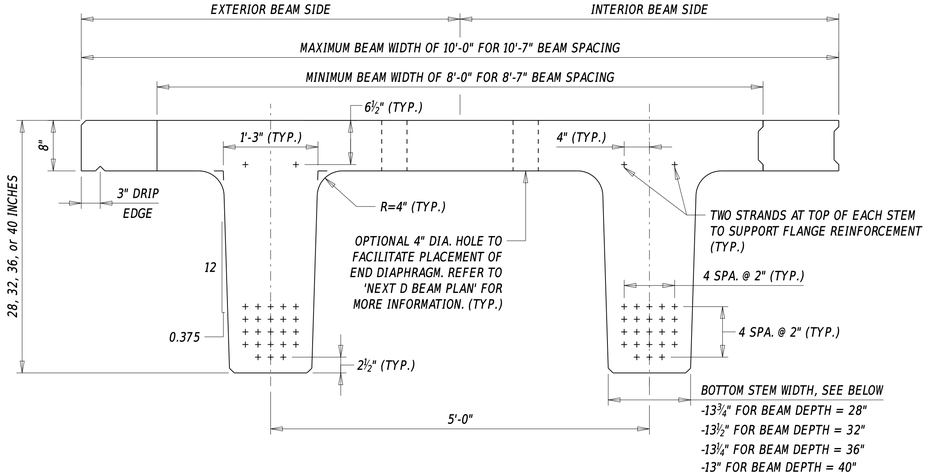

NEXT D BEAM STRAND CONFIGURATION

REFER TO FLANGE CONNECTION DETAILS FOR MORE INFORMATION ON SHEAR KEY END

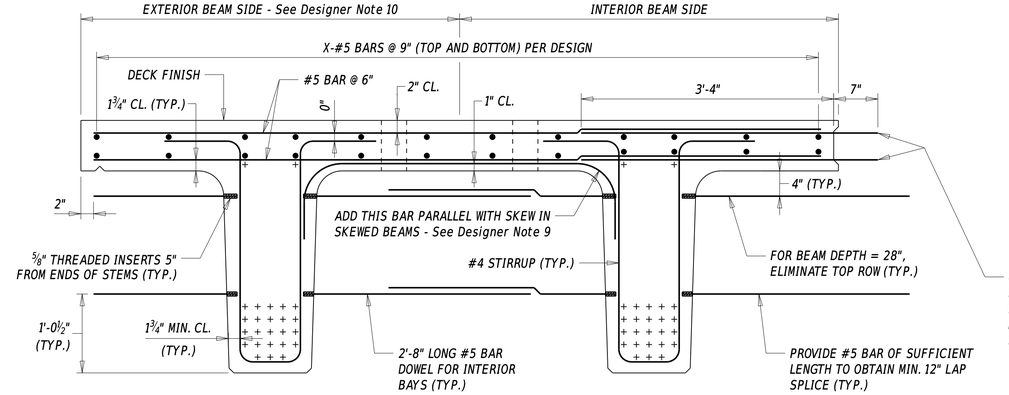

NEXT D BEAM TYPICAL REINFORCING SECTION

EXAMPLE SHOWN USING MAXIMUM WIDTH OF 10'-0"

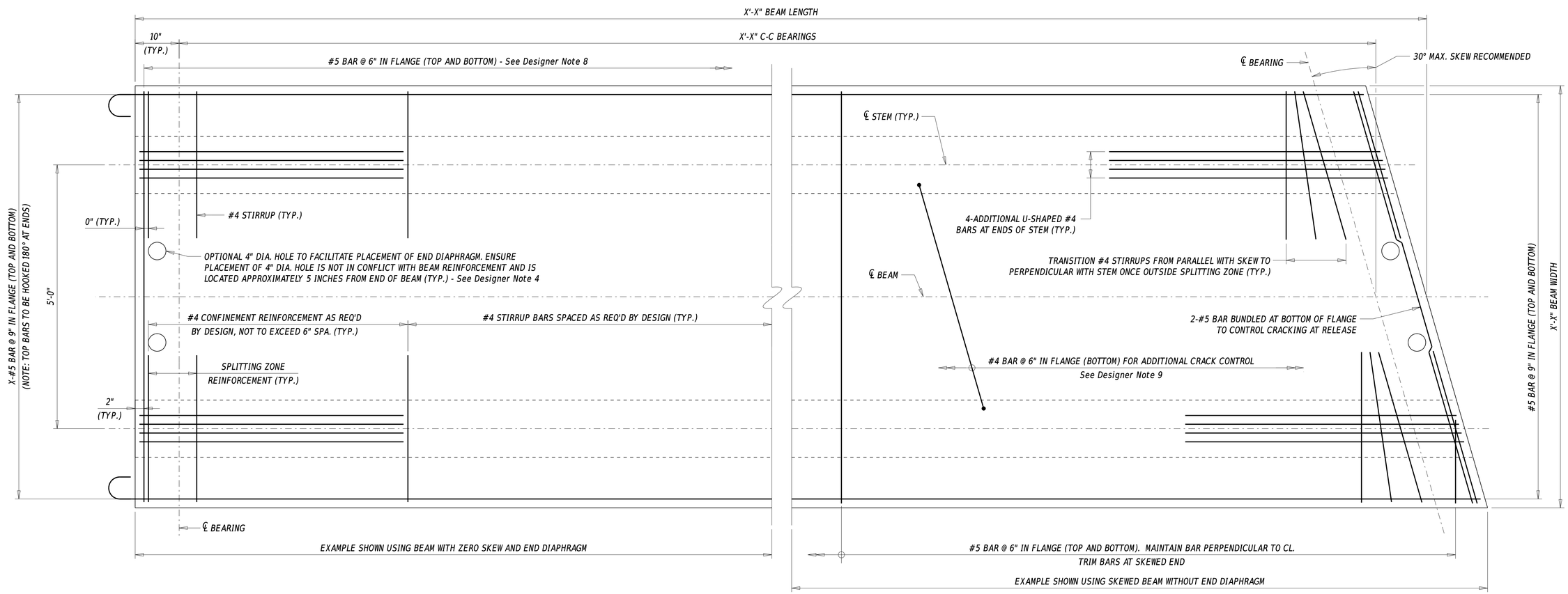

NEXT D BEAM PLAN

EXAMPLE SHOWN USING MINIMUM WIDTH OF 8'-0"

DELAWARE DEPARTMENT OF TRANSPORTATION BRIDGE DESIGN MANUAL	PRESTRESSED CONCRETE NEXT BEAM BRIDGE DETAILS	NOT TO SCALE	ISSUE DATE 10/01/2015 2022 10/01/2017 04/01/2021	DETAIL No. 330.03 SHEET No. 1 of 3

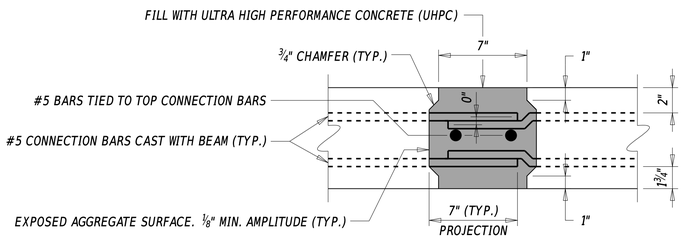

FLANGE CONNECTION SECTION

See Designer Note 8

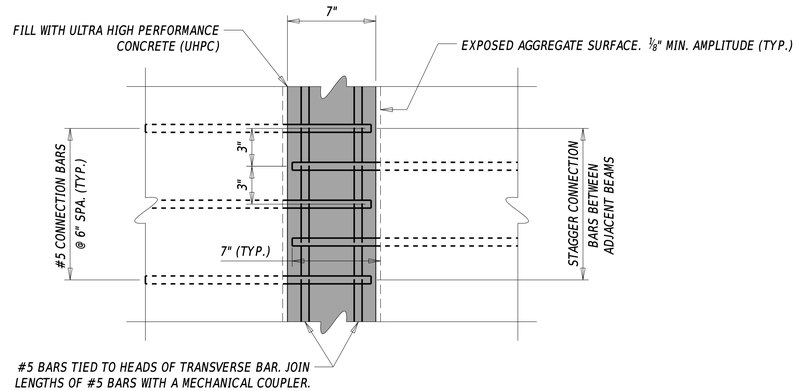

FLANGE CONNECTION PLAN

See Designer Note 8

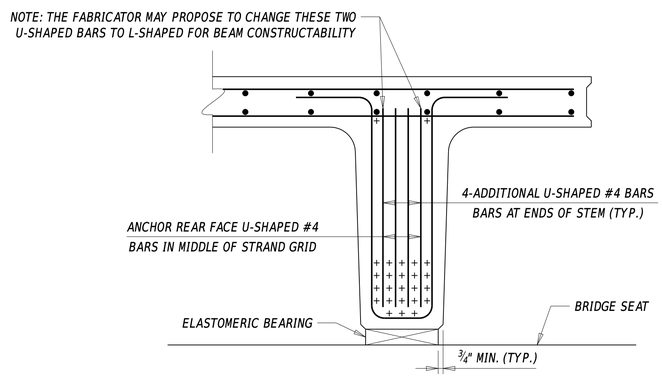

NEXT D BEAM STEM END SECTION

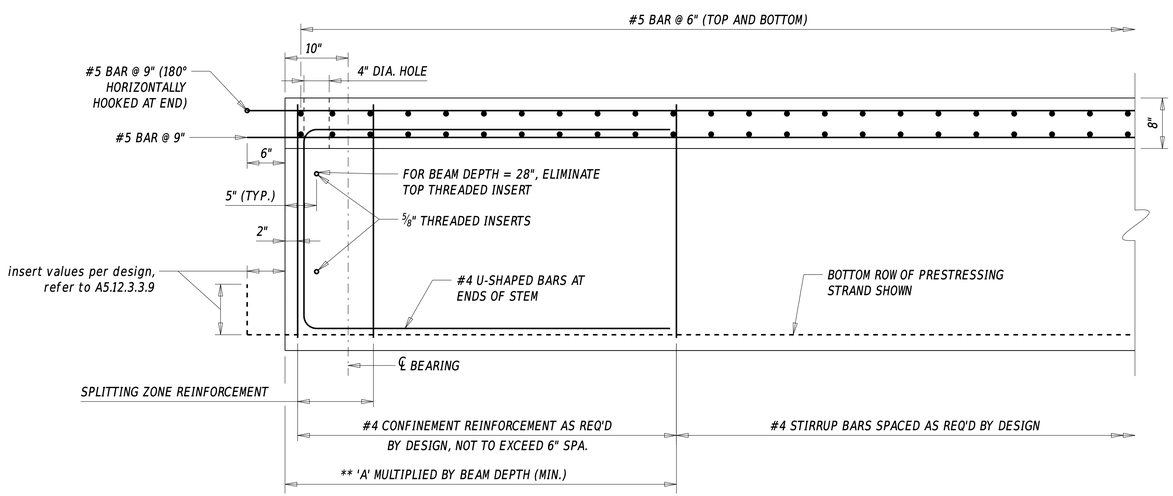

** CONFINEMENT ZONE
'A' = 2.0 FOR 0.6" DIA. STRANDS

NEXT D BEAM HALF-ELEVATION

NOTE: EXAMPLE SHOWN WITH END DIAPHRAGM.

NOTE: ALL REINFORCEMENT FOR THE NEXT BEAM IS INCLUDED IN ITEM (insert appropriate beam item number). THE REINFORCING BAR LIST AND BENDING DIAGRAMS MUST BE SHOWN ON THE NEXT BEAM SHEETS AND SEPARATE FROM THE BRIDGE REINFORCEMENT BAR SHEET.

REINFORCING BAR LIST

STRAIGHT BARS				BENT BARS			
MARK	SIZE	QTY.	LENGTH	MARK	SIZE	QTY.	LENGTH
BM5XXE	5	----	----	BM4XXE	4	----	----
BM5XXE	5	----	----	BM4XXE	4	----	----
BM5XXE	5	----	----	BM4XXE	4	----	----
BM5XXE	5	----	----	BM4XXE	4	----	----

BENDING DIAGRAMS

NOTE: ALL DIMENSIONS ARE FROM OUT TO OUT.

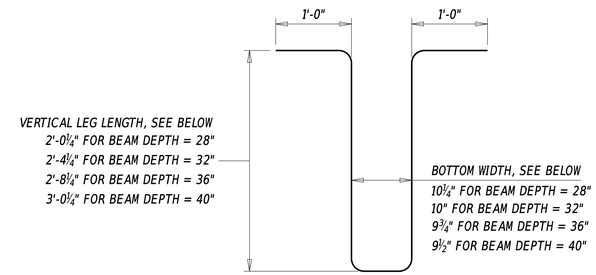

BM4XXE (#4 STIRRUP)

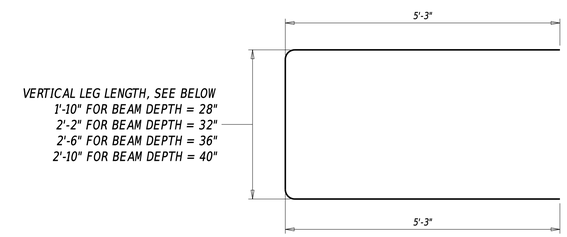

BM4XXE (#4 U-SHAPED BARS AT ENDS OF STEM)

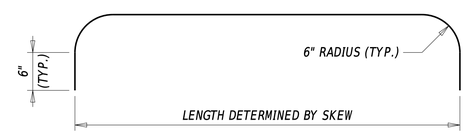

BM4XXE (#4 BAR FOR ADDITIONAL CRACK CONTROL IN SKEWED BEAMS)

NOTE: REINFORCING BAR LIST COUNT IS PER BEAM

NOTE: THE ABOVE DIMENSIONS ARE RECOMMENDED. THE DESIGNER IS STILL RESPONSIBLE FOR ENSURING THAT THE DIMENSIONS SHOWN ON PLANS ARE ACCURATE AND PROJECT-SPECIFIC.

NOTE: BARS SHOWN AS SOLID LINES REPRESENT BARS TO BE PLACED AT S.F. AND BETWEEN STEMS. BARS SHOWN AS DASHED LINES REPRESENT BARS PLACED AT F.F. OF DIAPHRAGMS.

NOTE: EXAMPLE SHOWN USING ZERO CROSS SLOPE. FOR BITUMINOUS CONCRETE OVERLAYS, THE DESIGNER MUST SPECIFY AN INITIAL WATERPROOFING MEMBRANE TO BE PLACED ATOP THE DECKS. IN CASES WHERE THE DECK SURFACE IS EXPOSED TO THE TRAFFIC OR IF A THIN POLYMER OR EPOXY OVERLAY IS APPLIED ATOP THE DECK, PLACE THE BEAMS ON SLOPED ABUTMENT/PIER TO MEET CROSS SLOPE REQUIREMENTS. FULL DEPTH ROADBOX IS NOT REQUIRED OVER NEXT D BEAMS, THEREFORE BITUMINOUS CONCRETE OVERLAY THICKNESS SHOULD BE MINIMAL.

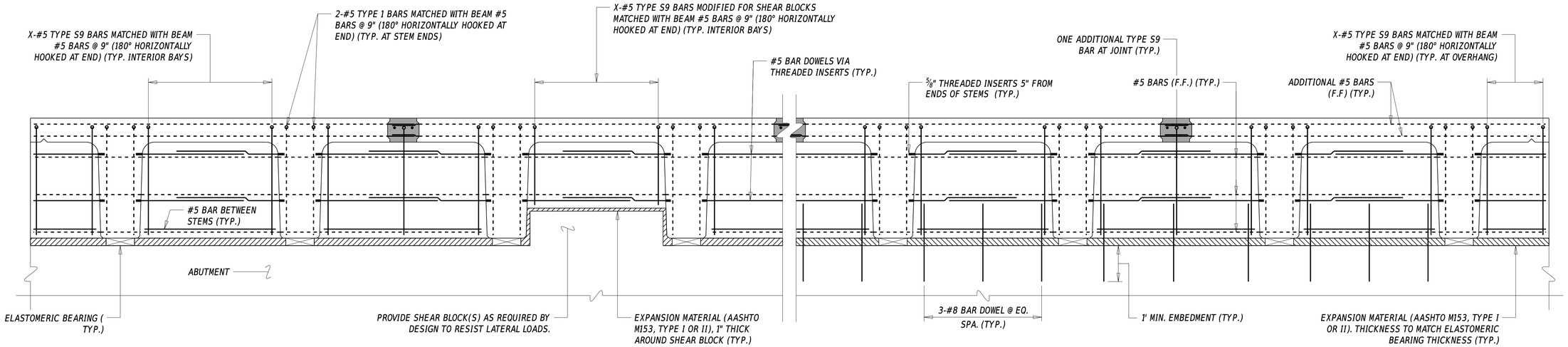

END DIAPHRAGM DETAIL FOR EXPANSION BEARINGS

EXAMPLE SHOWN USING 40" NEXT D BEAM WITH MAXIMUM BEAM WIDTH OF 10'-0" WITH 10'-7" BEAM SPACING

END DIAPHRAGM DETAIL FOR FIXED BEARINGS

EXAMPLE SHOWN USING 40" NEXT D BEAM WITH MAXIMUM BEAM WIDTH OF 10'-0" WITH 10'-7" BEAM SPACING

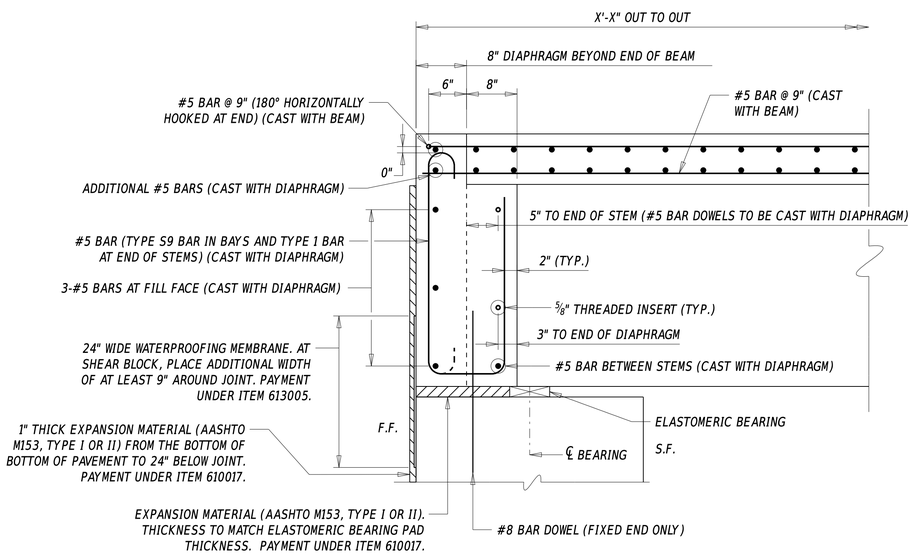

END DIAPHRAGM SECTION

EXAMPLE SHOWN USING 40" NEXT D BEAM (SECTION BETWEEN STEMS) WITH 1'-4" WIDE END DIAPHRAGM AND 3'-0" WIDE ABUTMENT. THIS EXAMPLE ILLUSTRATES A TYPE IIA ABUTMENT (SEE SECTION 103.6.2)

F.F. = FILL FACE
S.F. = STREAM FACE

DESIGNER NOTES

1. REFER TO SECTIONS 103.4.1.2.3 AND 106.9 FOR MORE INFORMATION ON PRESTRESSED CONCRETE NEXT BEAMS.
2. ADDITIONAL GUIDANCE ON PRESTRESSED CONCRETE NEXT BEAMS CAN BE FOUND IN PUBLICATION 'NORTHEAST EXTREME TEE (NEXT) BEAM GUIDE DETAILS' (SECOND EDITION 2021) BY PRECAST/PRESTRESSED CONCRETE INSTITUTE NORTHEAST.
3. THE DEPARTMENT PREFERS USE OF NEXT D BEAMS OVER NEXT E OR NEXT F BEAMS. AS RESULT, ONLY NEXT D BEAMS ARE SHOWN IN THESE DETAILS. APPROVAL FROM THE BRIDGE DESIGN ENGINEER IS NEEDED BEFORE CHOOSING NEXT E OR NEXT F BEAMS OVER NEXT D BEAMS.
4. OPTIONAL USE OF 4" DIA. HOLES IN FLANGES TO FACILITATE PLACEMENT OF END DIAPHRAGM IS PREFERRED OVER USE OF FLANGE BLOCKOUTS. THE DESIGNER MAY CONSIDER INCREASING THE DIAMETER OF THE HOLE AS NECESSARY BUT MUST ADJUST PLACEMENT OF FLANGE REINFORCEMENT TO AVOID ANY CONFLICTS. FOR BEAMS WITH MAXIMUM WIDTH OF 10', THE DESIGNER SHOULD CONSIDER INSTALLING ONE ADDITIONAL HOLE IN EACH OF INTERIOR FLANGE OVERHANGS.
5. POTENTIAL USE OF FLANGE BLOCKOUTS ARE NOT SHOWN IN THE DETAILS. THE DESIGNER MAY CONSIDER USE OF FLANGE BLOCKOUTS IF IT IS DETERMINED IT WILL NOT CAUSE SEVERE CRACKING WITHIN THE SPLITTING ZONE AT RELEASE.
6. THE PRESTRESSED CONCRETE NEXT BEAM SECTION AND STRAND CONFIGURATION AS SHOWN IN THESE DETAILS ARE RECOMMENDED. IF THE DESIGNER IS CONSIDERING USING DIFFERENT STRAND PATTERNS OR CREATING NON SYMMETRICAL SECTIONS, NOTE THAT THE FABRICATION COSTS WILL LIKELY INCREASE SIGNIFICANTLY.
7. 0.6" DIA. PRESTRESSING STRANDS SHALL BE USED IN PRESTRESSED CONCRETE NEXT BEAMS. DRAPING OF STRANDS IN PRESTRESSED CONCRETE NEXT BEAMS IS NOT PERMITTED. CONSIDER DEBONDING APPROXIMATELY HALF OF THE STRANDS FOR 6" TO ALLEVIATE CRACKING.
8. FLANGE CONNECTION REINFORCEMENT MUST BE PLACED PERPENDICULAR TO THE BEAM EDGE IN ALL CASES (SKEWED AND NON SKEWED CONDITIONS). FOR PRESTRESSED CONCRETE NEXT BEAMS WITH SKEWED ENDS, THE CONNECTION REINFORCEMENT SHOULD BE BEND WITHIN THE FLANGE IN ACUTE CORNERS TO PRODUCE A SQUARE PROJECTION.
9. SKEWED NEXT BEAMS EXPERIENCE INCREASED CRACKING AT RELEASE AND DURING HANDLING AND SHIPPING. ADD THE EXTRA BAR AS NOTED IN THE DETAILS. SKEWS IN EXCESS OF 30° ARE POSSIBLE WITH ADDITIONAL MEASURES TAKEN TO ALLEVIATE CRACKING. SEE THE PUBLICATION REFERENCE IN DESIGNER NOTE 2.
10. REINFORCEMENT FOR BARRIERS TO BE CAST WITH PRESTRESSED CONCRETE NEXT BEAMS NOT SHOWN FOR CLARITY. REFER TO DETAIL NO. 325.02 - 'BRIDGE RAILING DETAILS' FOR MORE INFORMATION. THE DESIGNER MUST VERIFY THAT THE OVERHANG REINFORCEMENT AS SHOWN IN DETAIL NO. 330.03 IS SUFFICIENT TO RESIST VEHICULAR IMPACT FORCES. ADDITIONAL REINFORCEMENT MAY BE REQUIRED.
11. THE DESIGNER MUST CONSIDER THE DIFFERENCES IN DECK THICKNESS BETWEEN CENTERLINE OF BEARINGS AND POINT OF MINIMUM THICKNESS ALONG THE BEAM DUE TO THE DIFFERENCE IN THE PROFILE TO CAMBERED SHAPE OF THE PRESTRESSED CONCRETE NEXT BEAMS. THE FINAL GRADES AND SUBSTRUCTURE ELEVATIONS MUST BE ADJUSTED ACCORDINGLY. FOR BRIDGES ON SAG VERTICAL CURVES, CONSIDER THE APPROPRIATE OVERLAY TYPE TO USE DUE TO POTENTIAL CONFLICT BETWEEN BEAM CAMBER AND PROFILE GRADES. THE THICKNESS OF THE OVERLAY MAY BECOME EXCESSIVE AT THE BEAM ENDS. FOR BRIDGES ON CREST VERTICAL CURVES, SMALL DIFFERENCES BETWEEN THE BEAM CAMBER AND THE PROFILE GRADE CAN BE ACCEPTABLE WITHOUT ANY FURTHER ADJUSTMENTS. THIS SHOULD BE NOTED AS SO ON THE PLANS.
12. FURTHER GUIDANCE ON PIER DIAPHRAGM DETAILS AND DOWEL DETAILS CAN BE FOUND IN DETAIL 325.01 - CONCRETE DECK DETAILS.
13. MORE INFORMATION ON ALTERNATIVE BARRIER/PARAPET ATTACHMENTS, END DIAPHRAGM DETAILS, PIER CONTINUITY DETAILS, AND UTILITY SUPPORT DETAILS CAN BE FOUND IN THE PUBLICATION REFERENCED IN DESIGNER NOTE 2. THESE DETAILS SHOULD BE CONSIDERED IF THE DETAILS AS SHOWN IN DETAIL NO. 325.01, 325.02, AND 330.03 ARE NOT REASONABLE CHOICES BASED ON PROJECT CONDITIONS.
14. ENSURE WORKING DRAWINGS MEET ALL REQUIREMENTS AS OUTLINED IN SECTION 612.3.1 OF THE DELDOT STANDARD SPECIFICATIONS.

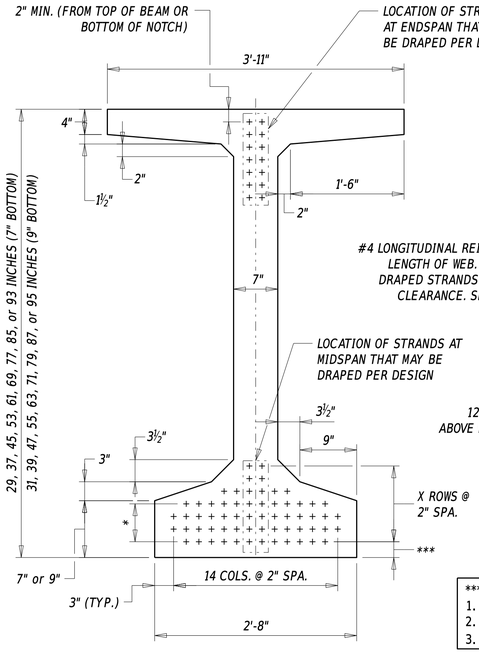

STRAND CONFIGURATION

(7" WEB, EXAMPLE SHOWN USING 9" BOTTOM FLANGE)

NOTE: + = DENOTES AVAILABLE LOCATIONS FOR STRAND PLACEMENT.

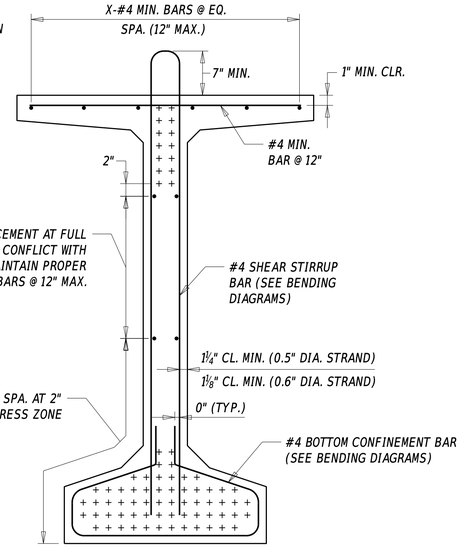

*** SPACING FROM ℄ BOTTOM ROW STRANDS TO BOTTOM OF BEAM:
1. 2" MIN. IF BEAM DAP IS NOT REQUIRED.
2. REFER TO DESIGNER NOTE 5 FOR REQ. SPACING IF BEAM DAP IS USED.
3. EXAMPLE DETAILS SHOW 2½" SPACING USED.

TYPICAL REINFORCING SECTION

(7" WEB, EXAMPLE SHOWN USING 9" BOTTOM FLANGE)

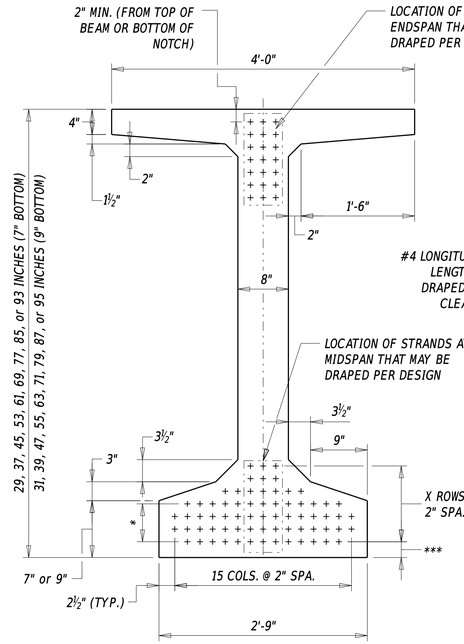

STRAND CONFIGURATION

(8" WEB, EXAMPLE SHOWN USING 9" BOTTOM FLANGE)

NOTE: + = DENOTES AVAILABLE LOCATIONS FOR STRAND PLACEMENT.

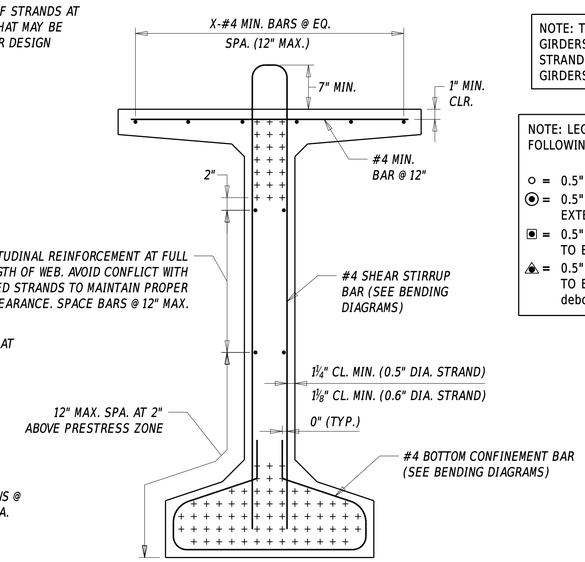

*** SPACING FROM ℄ BOTTOM ROW STRANDS TO BOTTOM OF BEAM:
1. 2" MIN. IF BEAM DAP IS NOT REQUIRED.
2. REFER TO DESIGNER NOTE 5 FOR REQ. SPACING IF BEAM DAP IS USED.
3. EXAMPLE DETAILS SHOW 2½" SPACING USED.

TYPICAL REINFORCING SECTION

(8" WEB, EXAMPLE SHOWN USING 9" BOTTOM FLANGE)

NOTE: THE STRAND CONFIGURATION AS SHOWN FOR PCEF GIRDERS UTILIZING 7" WEBS MAY BE SUBSTITUTED FOR THE STRAND CONFIGURATION AS SHOWN IN DETAILS FOR PCEF GIRDERS UTILIZING 8" WEBS.

NOTE: LEGEND TO BE ADDED ON PLAN SHEETS MUST SHOW THE FOLLOWING (see Designer Note 2):

- ○ = 0.5" or 0.6" DIA., 270 ksi PRESTRESSING STRANDS
- ⦿ = 0.5" or 0.6" DIA., 270 ksi PRESTRESSING STRANDS TO BE EXTENDED INTO THE PIER
- ▣ = 0.5" or 0.6" DIA., 270 ksi PRESTRESSING STRANDS TO BE DEBONDED AT X'-X" @ EACH END
- ◈ = 0.5" or 0.6" DIA., 270 ksi PRESTRESSING STRANDS TO BE DEBONDED AT X'-X" @ EACH END (if more than one debonded length is required)

* STRAND LOCATION:
3 ROWS FOR 7" BOTTOM FLANGE
4 ROWS FOR 9" BOTTOM FLANGE

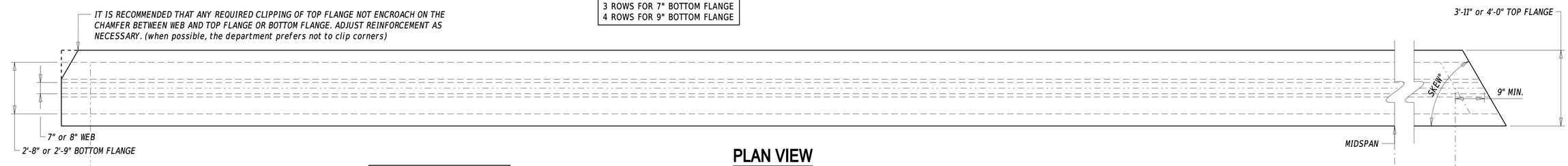

PLAN VIEW

NOTE: EXAMPLE UTILIZES ZERO SKEW AT ABUTMENT END AND 60° SKEW AT PIER END.

** CONFINEMENT ZONE
'A' = 1.5 FOR 0.5" DIA. STRANDS
'A' = 2.0 FOR 0.6" DIA. STRANDS

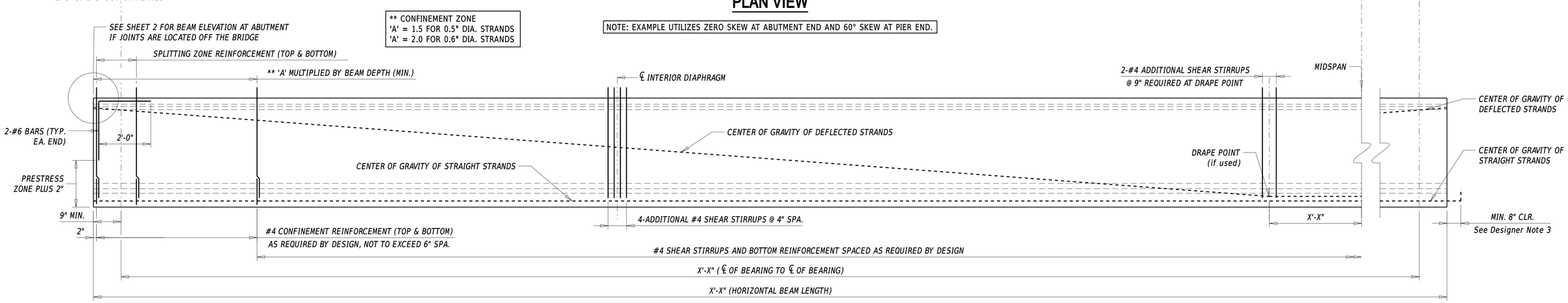

ELEVATION

NOTE: PRESTRESS ZONE IS DEFINED AS THE DISTANCE FROM THE BOTTOM OF THE BEAM TO THE TOP ROW OF STRAIGHT STRANDS.

NOTE: EXAMPLE ASSUMES JOINT WILL BE AT ABUTMENT (NO NOTCH ON TOP OF BEAM AT ABUTMENT END). LONGITUDINAL BARS NOT SHOWN FOR CLARITY.

DELDOT BRIDGE DESIGN SECTION — DELAWARE DEPARTMENT OF TRANSPORTATION BRIDGE DESIGN MANUAL	PRESTRESSED CONCRETE PCEF BEAM BRIDGE DETAILS	NOT TO SCALE	ISSUE DATE 10/01/2015	DETAIL No. 330.04
				SHEET No. 1 of 2

NOTE: ALL REINFORCEMENT FOR THE PCEF BEAM IS INCLUDED IN ITEM (insert appropriate beam item number). THE REINFORCING BAR LIST AND BENDING DIAGRAMS MUST BE SHOWN ON THE PCEF GIRDER SHEETS AND SEPARATE FROM THE BRIDGE REINFORCEMENT BAR SHEET. THE BELOW DIMENSIONS ARE RECOMMENDED. THE DESIGNER IS STILL RESPONSIBLE FOR ENSURING THAT THE DIMENSIONS SHOWN ON PLANS ARE ACCURATE AND PROJECT-SPECIFIC.

REINFORCING BAR LIST

STRAIGHT BARS				BENT BARS			
MARK	SIZE	NUMBER	LENGTH	MARK	SIZE	NUMBER	LENGTH
BMXXXE	----	----	----	BM4XXE	4	----	----
BMXXXE	----	----	----	BM4XXE	4	----	----
BMXXXE	----	----	----	BM4XXE	4	----	----
BMXXXE	----	----	----	BM4XXE	4	----	----

BENDING DIAGRAMS

NOTE: ALL DIMENSIONS ARE FROM OUT TO OUT.

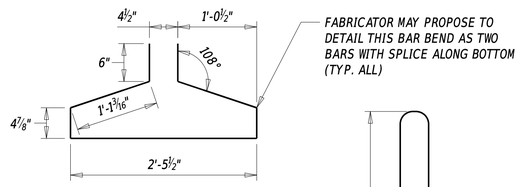

BM4XXE (7" WEB, 7" BOTTOM)

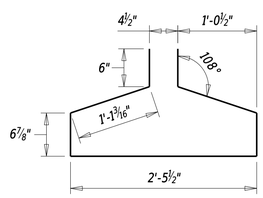

BM4XXE (7" WEB, 9" BOTTOM)

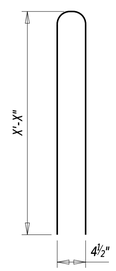

BM4XXE (7" WEB)

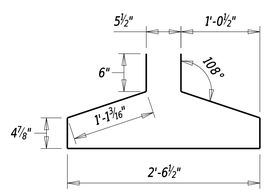

BM4XXE (8" WEB, 7" BOTTOM)

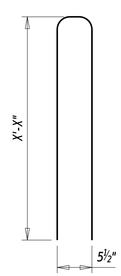

BM4XXE (8" WEB)

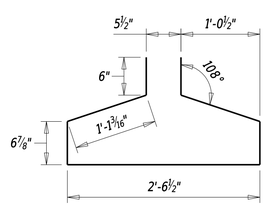

BM4XXE (8" WEB, 9" BOTTOM)

NOTE: REINFORCING BAR LIST COUNT IS PER BEAM

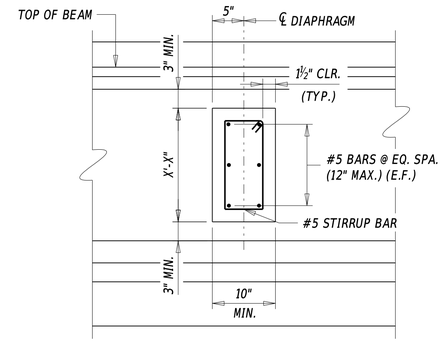

SECTION A-A

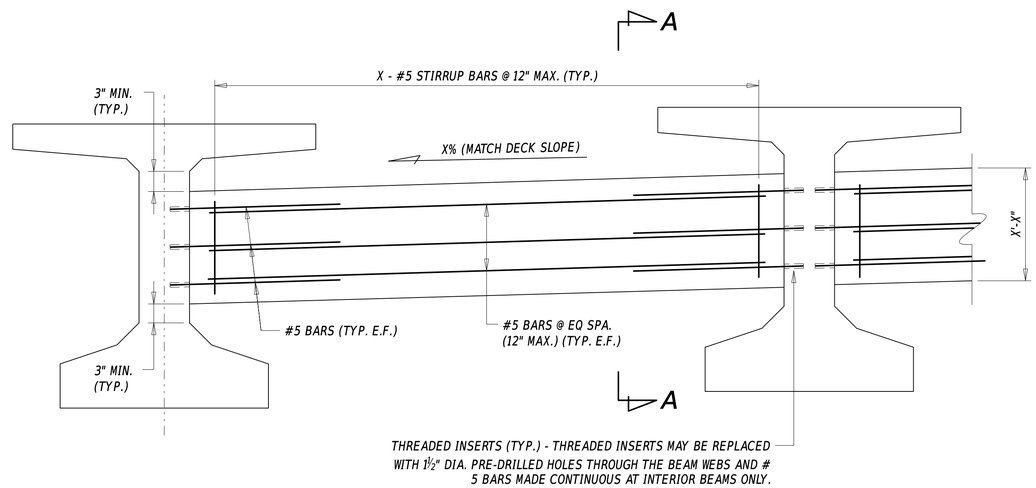

INTERMEDIATE DIAPHRAGM ELEVATION

See Designer Note 6

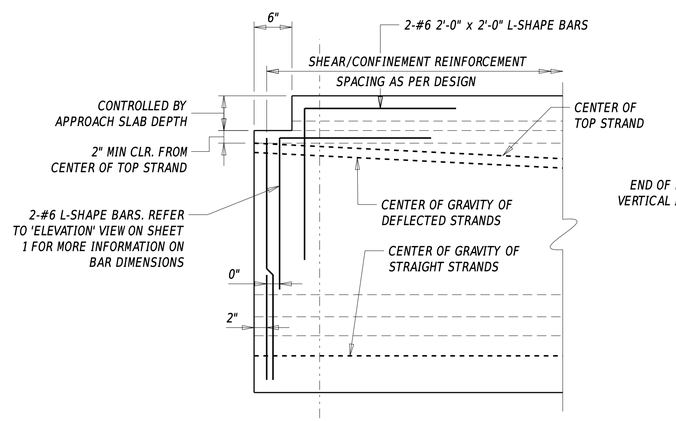

BEAM ELEVATION AT ABUTMENT

NOTE: TYPICAL FOR JOINTS LOCATED OFF THE BRIDGE. REFER TO 'ELEVATION' VIEW ON SHEET 1 FOR MORE INFORMATION ON REINFORCEMENT.

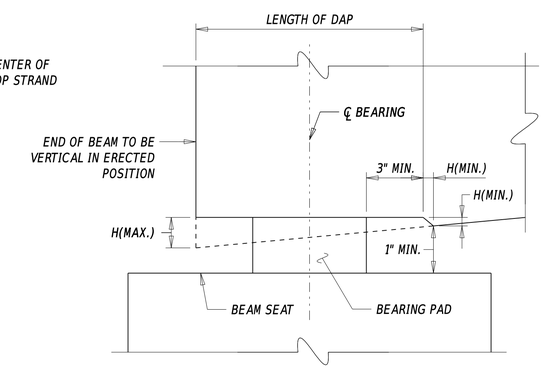

LOW END OF BEAM

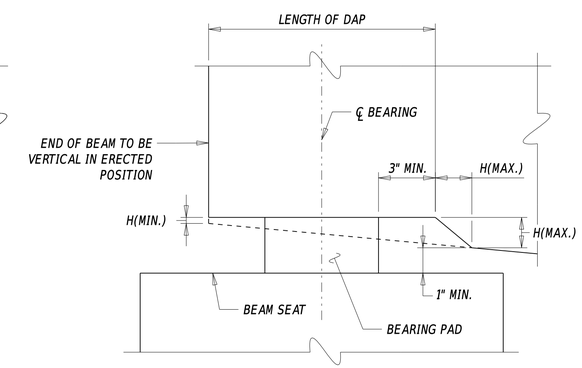

HIGH END OF BEAM

BEAM DAP DETAILS

NOTE: THE DAP LENGTH MUST PARALLEL BEARING PAD EDGE. See Designer Note 5.

DESIGNER NOTES

1. REFER TO SECTION 106.9 FOR MORE INFORMATION ON THE DESIGN AND DETAILING OF PRESTRESSED CONCRETE PCEF GIRDERS. ALSO REFER TO SECTION 103.4.1.2 FOR MORE INFORMATION ON WHEN USE OF PCEF GIRDERS IS APPROPRIATE.
2. FOR MORE INFORMATION ON ALLOWABLE PRESTRESSING STRAND TYPE AND SIZES, REFER TO SECTION 205.4.4.
3. FOR MORE INFORMATION ON DESIGN AND DETAILING OF PRESTRESSING STRANDS EXTENDING INTO THE PIER DIAPHRAGM, REFER TO A5.12.3.3.9.
4. EXAMPLES IN THIS DETAIL UTILIZE #4 BARS. THIS IS THE MINIMUM REBAR SIZE. HIGHER BAR SIZES MAY BE REQUIRED AS PER DESIGN.
5. BEAM DAP CALCULATIONS INCLUDE BOTH BEAM CAMBER AND ROADWAY GRADE. BEAM DAP SHOULD BE USED ONLY WHEN H(MAX.) IS ¼" TO 1½". THE MINIMUM DISTANCE FROM BOTTOM OF BEAM TO CENTER OF BOTTOM-MOST STRAND ROW SHALL BE AS FOLLOW:
   -DISTANCE = 2½" WHEN H(MAX.) IS ¼" TO LESS THAN OR EQUAL TO ¾"
   -DISTANCE = 3" WHEN H(MAX.) IS GREATER THAN ¾" TO LESS THAN OR EQUAL TO 1¼"
   -DISTANCE = 3¼" WHEN H(MAX.) IS GREATER THAN 1¼" TO LESS THAN OR EQUAL TO 1½"
   -WHEN H(MAX.) IS GREATER THAN 1½", USE BEVELED SOLE PLATE AND 2" MINIMUM DISTANCE.
   -IF THE BEAM END IS SKEWED, USE OF BEVELED SOLE PLATE IS PREFERRED OVER USE OF BEAM DAP.
6. INTERMEDIATE DIAPHRAGMS FOR PRESTRESSED CONCRETE PCEF GIRDERS SHALL BE CAST-IN-PLACE CONCRETE, PRECAST CONCRETE, OR GALVANIZED STEEL. THE INTERMEDIATE DIAPHRAGM DETAILS DEPICTED ON SHEET 2 SHOWS THE CAST-IN-PLACE CONCRETE OPTION. FURTHER GUIDANCE MAY BE FOUND IN SECTION 106.9.3.
7. DETAILS FOR STAY-IN-PLACE FORMS, PIER DIAPHRAGM, AND END DIAPHRAGM CAN BE FOUND IN DETAIL NO. 325.01 - CONCRETE DECK DETAILS.
8. ENSURE WORKING DRAWINGS MEET ALL REQUIREMENTS AS OUTLINED IN SECTION 612.03(B)&(E) OF THE DELDOT STANDARD SPECIFICATIONS.

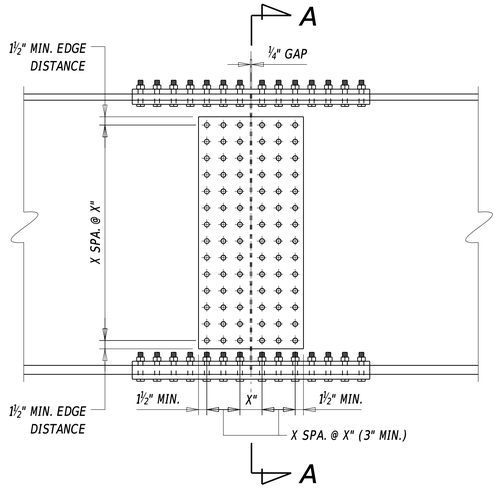

WEB SPLICE DETAIL

NOTE: EXAMPLE SHOWN MUST BE MODIFIED TO MEET DESIGN REQUIREMENTS. TYP. ALL FOR SPLICE DETAILS SHOWN ON THIS SHEET.

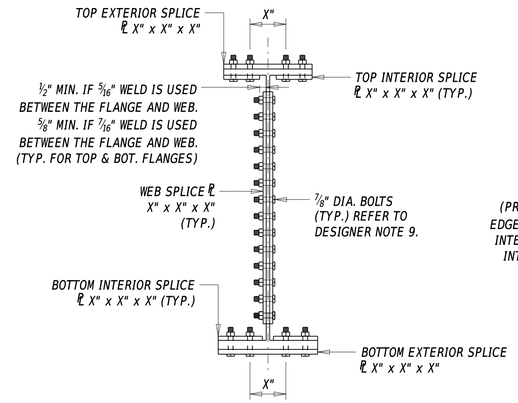

SECTION A-A

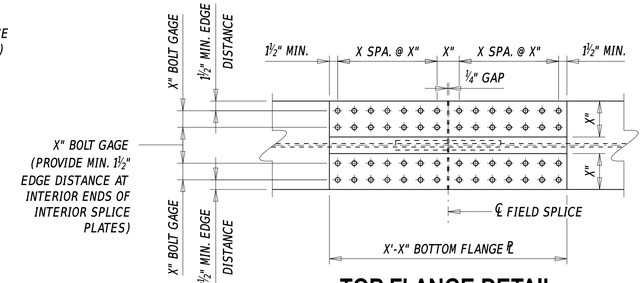

TOP FLANGE DETAIL

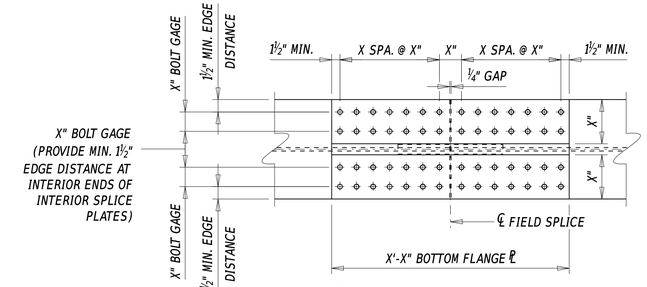

BOTTOM FLANGE DETAIL

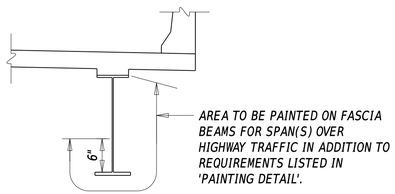

FASCIA BEAM PAINTING DETAIL

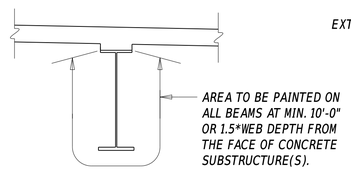

PAINTING DETAIL

NOTE: PROVIDE ABOVE DETAILS FOR WEATHERING STEEL BRIDGES.

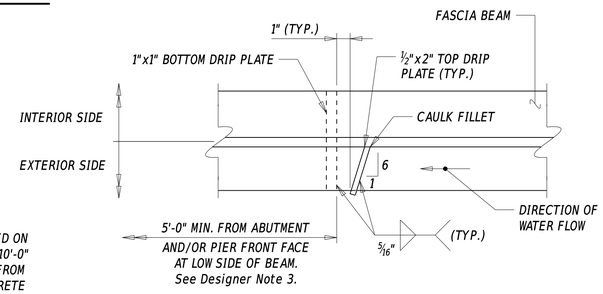

DRIP PLATE DETAIL

NOTE: PROVIDE ABOVE DETAIL FOR WEATHERED STEEL BRIDGES.

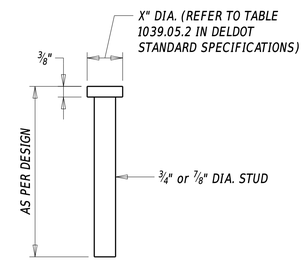

STUD DETAIL

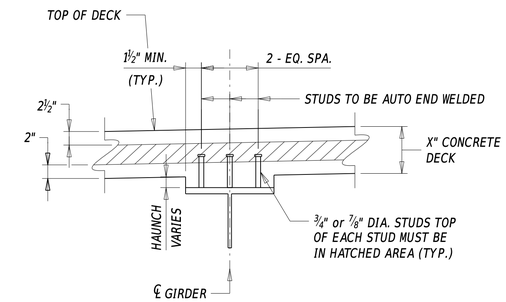

SHEAR STUD DETAIL

NOTE: EXAMPLE SHOWN USING 3 SHEAR STUDS PER ROW.

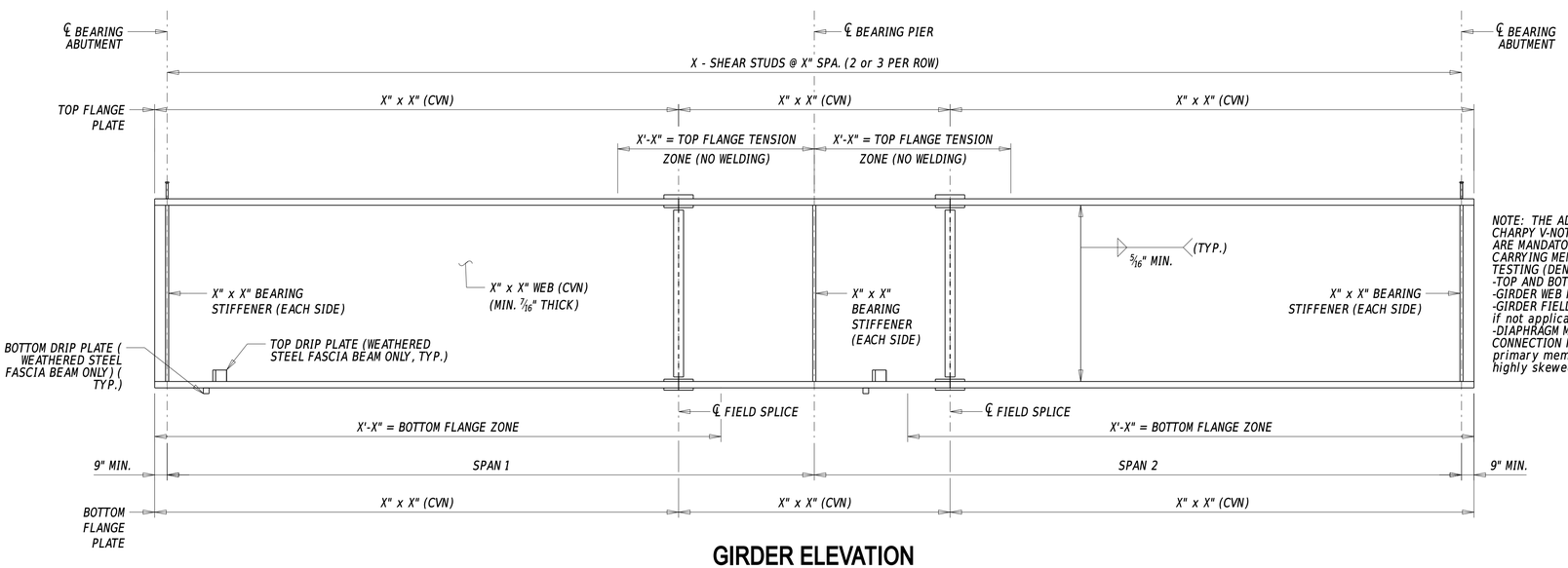

NOTE: THE ADDITIONAL REQUIREMENTS FOR CHARPY V-NOTCH TESTING OF AASHTO M270 ARE MANDATORY FOR PRIMARY LOAD CARRYING MEMBERS. MEMBERS REQUIRING TESTING (DENOTED AS 'CVN') INCLUDE:
-TOP AND BOTTOM GIRDER FLANGES
-GIRDER WEB PLATES
-GIRDER FIELD SPLICE PLATES (remove note if not applicable)
-DIAPHRAGM MEMBERS AND DIAPHRAGM CONNECTION PLATES (only if considered a primary member such as in curved or highly skewed bridges)

GIRDER ELEVATION

NOTE: CONNECTION PLATES AND POTENTIAL JACKING STIFFENERS NOT SHOWN FOR CLARITY. 'CVN' DENOTES CHARPY V-NOTCH TESTING.

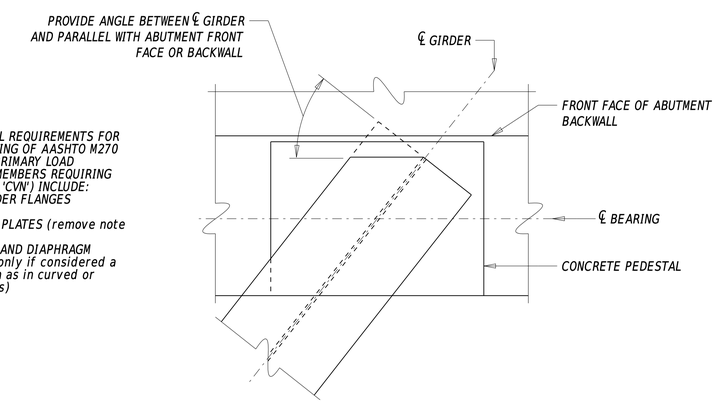

GIRDER FLANGE CLIP DETAIL

NOTE: PROVIDE SIMILAR ABOVE DETAIL AS REQUIRED FOR SKEWED BRIDGES. SOLE PLATE AND BEARING NOT SHOWN FOR CLARITY.

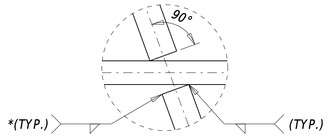

DETAIL A

* NOTE: WELD SIZE MUST BE INCREASED BY AMOUNT OF GAP BETWEEN BEARING STIFFENER OR CONNECTION PLATE AND WEB WHEN GAP EXCEEDS 1/16". INDICATE SIZE ON SHOP DRAWINGS.

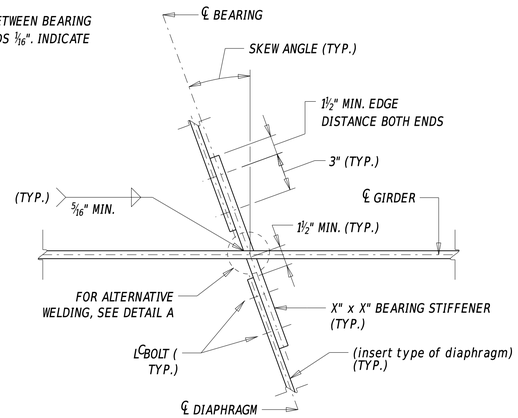

CONNECTION PLATE DETAIL FOR SKEWS UP TO 20° (OPTION 1)

NOTE: EXAMPLE SHOWN USING BEARING STIFFENERS. TYPICAL FOR K-SHAPED INTERMEDIATE DIAPHRAGMS AND END/INTERMEDIATE DIAPHRAGMS UTILIZING MC CHANNELS OR W-BEAMS.

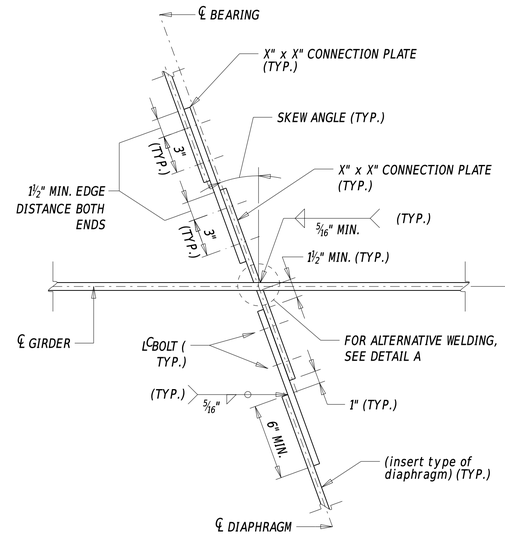

CONNECTION PLATE DETAIL FOR SKEWS UP TO 20° (OPTION 2)

NOTE: THE WELDING IN 'ALTERNATE INSTALLATION' MUST BE DONE BY THE FABRICATOR. EXAMPLE SHOWN USING CONNECTION PLATES. TYPICAL FOR INTERMEDIATE CROSS FRAME DIAPHRAGMS AND END DIAPHRAGMS UTILIZING W-BEAMS.

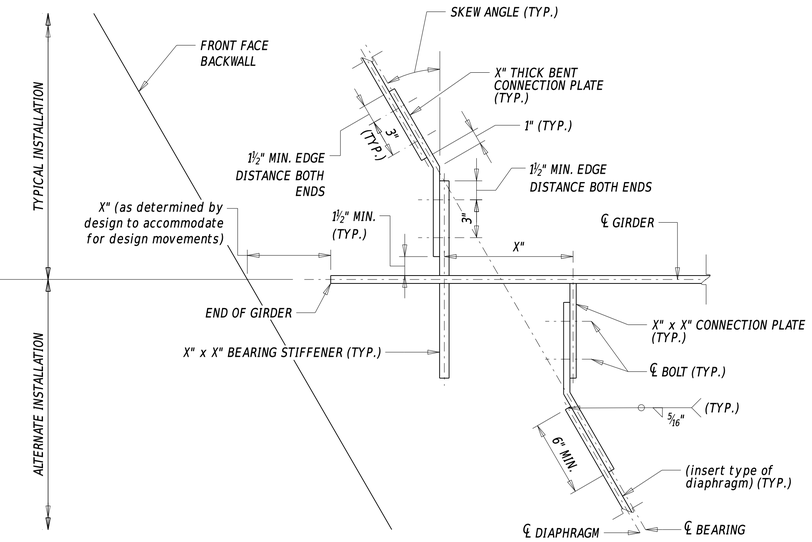

CONNECTION PLATE DETAIL FOR SKEWS GREATER THAN 20° (END & PIER ONLY)

NOTE: THE WELDING IN 'ALTERNATE INSTALLATION' MUST BE DONE BY THE FABRICATOR.

NOTE:
X = 1/4" +/- 1/8"
Y = 1/2" +/- 1/4"
Z = FOLLOWING:
-2½" FOR ½" WEB
-3" FOR 9/16" WEB
-4" FOR ¾" WEB

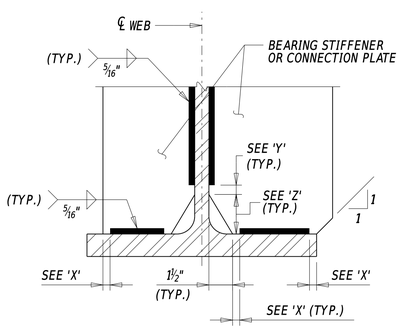

WELD TERMINATION AND CORNER CHAMFER DETAIL

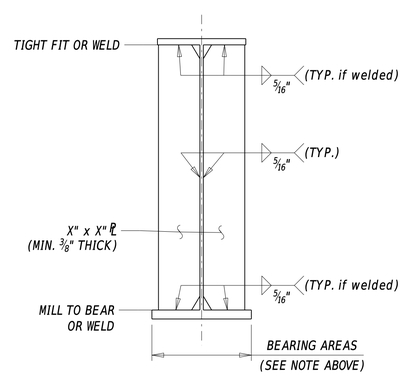

BEARING STIFFENER DETAIL

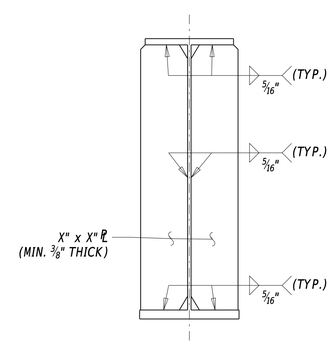

CONNECTION PLATE DETAIL FOR INTERMEDIATE DIAPHRAGMS

NOTE: CONNECTION PLATES NOT NEEDED ON EXTERIOR SIDE OF THE FASCIA GIRDER/BEAM.

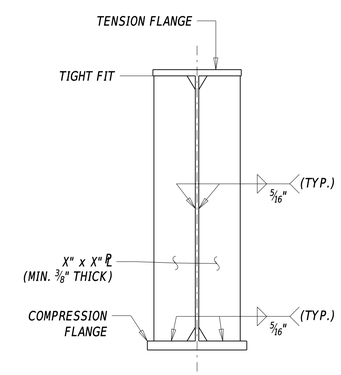

INTERMEDIATE STIFFENER DETAIL

NEGATIVE MOMENT REGION

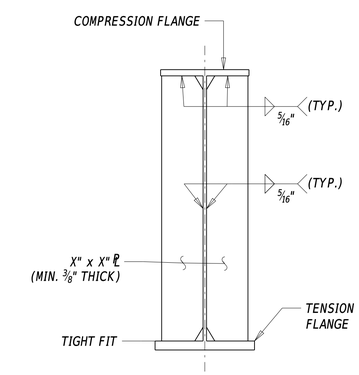

INTERMEDIATE STIFFENER DETAIL

POSITIVE MOMENT REGION

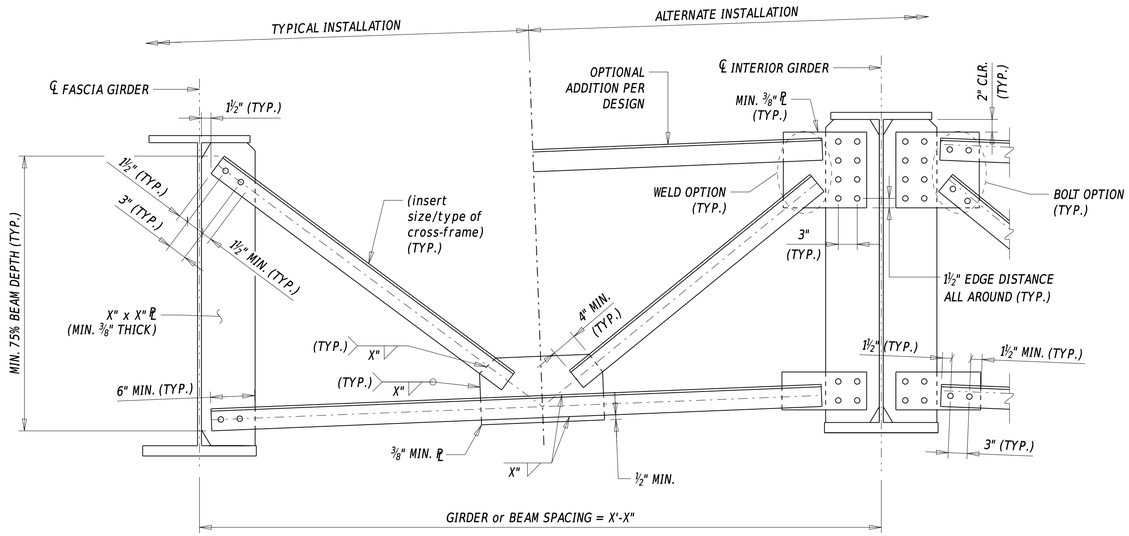

INTERMEDIATE CROSS-FRAME DETAIL

NOTE: EXAMPLE SHOWN USING L-SHAPE CROSS-FRAMES. WT-SHAPES OPTIONAL FOR CURVED GIRDERS.

DESIGNER NOTES

1. REFER TO SECTION 106.8 FOR FURTHER INFORMATION ON STEEL SUPERSTRUCTURE DESIGN CONSIDERATIONS.
2. ADDITIONAL GUIDANCE ON DETAILING OF STEEL SUPERSTRUCTURES CAN BE FOUND IN PUBLICATION 'AASHTO/NSBA STEEL BRIDGE COLLABORATION G 1.2 - 2003 -DESIGN DRAWING PRESENTATION GUIDELINES'.
3. AT 'DRIP PLATE DETAIL', THE DESIGNER SHOULD CONSIDER INCREASING THE DISTANCE GREATER THAN THE SPECIFIED 5'-0" MINIMUM FOR TALL ABUTMENTS OR PIERS TO LIMIT THE POTENTIAL FOR WIND-BLOWN WATER TO SPLASH ON THE CONCRETE SURFACES.
4. IF USE OF HIGHER PERFORMANCE STEELS (GRADES HPS 70W OR HPS 100W) ARE NEEDED, SPECIFICALLY CALL OUT WHICH STEEL PLATES WITHIN THE BEAM ARE TO BE MADE OF MATERIALS OTHER THAN GRADE 50W. REFER TO SECTION 106.8.1.3 FOR MORE INFORMATION.
5. MODIFIED DIAPHRAGMS OR CROSS-FRAMES TO SUPPORT UTILITY INFRASTRUCTURE NOT SHOWN IN THESE DETAILS. IF SUCH SUPPORTS ARE NEEDED, THE DETAILS MUST BE SHOWN ON PLANS.
6. IT IS PREFERRED TO NOT INCLUDE JACKING STIFFENERS IN END DIAPHRAGMS (IF MC-SHAPE OR W-BEAM DIAPHRAGMS ARE USED) FOR FUTURE JACKING DUE TO UNCERTAINTY OF EXACT PLACEMENT OF FUTURE JACKING. SUCH JACKING STIFFENERS SHOULD BE ADDED IN THE FIELD BY THE CONTRACTOR TO PERFORM JACKING OPERATIONS AT A LATER DATE. HOWEVER IF THE ALTERNATE END CROSS-FRAME AS SHOWN IN 'END DIAPHRAGM or END CROSS FRAME DETAILS' IS USED, THE DESIGNER SHOULD ADD FUTURE JACKING STIFFENERS AS APPROPRIATE IN THE MAIN BEAM/GIRDERS AND INCLUDE SUCH DETAILS ON PLANS.
7. DETAILS SPECIFICALLY FOR CURVED GIRDERS, TRUSS STRUCTURES, GUSSET PLATES, LONGITUDINAL STIFFENERS, AND LATERAL BRACING NOT INCLUDED IN DETAIL 335.01.
8. ADDITIONAL PROJECT SPECIFIC STEEL NOTES MAY BE NEEDED IF NOT COVERED IN SECTION 615 OF THE STANDARD SPECIFICATIONS OR DETAIL NO. 301.01 - BRIDGE PROJECT NOTES.
9. REFER TO SECTION 106.8.6 FOR MORE INFORMATION ON ALLOWABLE ALTERNATIVES TO HIGH STRENGTH ⅞" DIA. BOLTS.

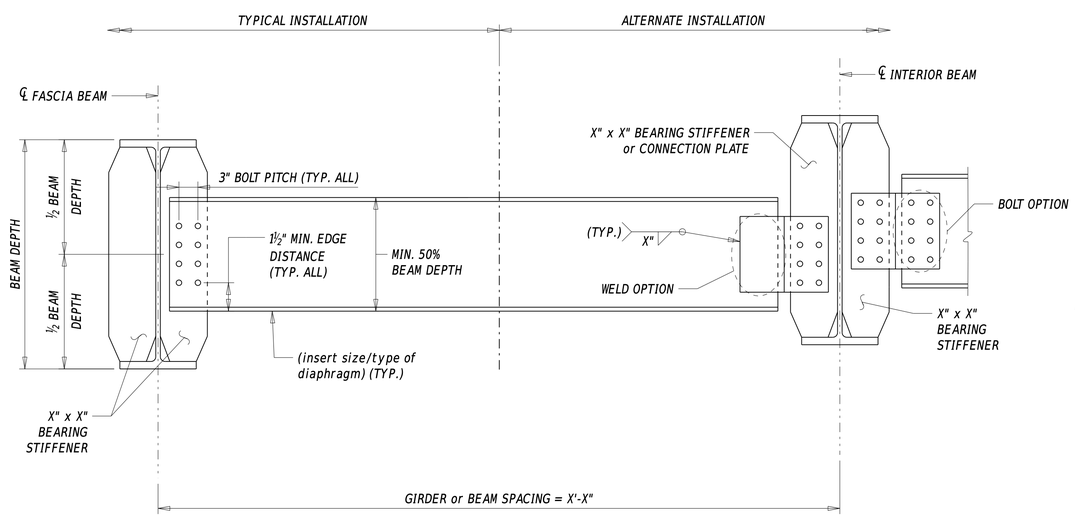

INTERMEDIATE DIAPHRAGM DETAILS FOR ROLLED BEAMS

NOTE: EXAMPLE SHOWN USING MC-SHAPE DIAPHRAGMS. W-BEAM OPTIONAL TO SERVE AS A DIAPHRAGM IF ROLLED BEAM DEPTH GREATER THAN 36 INCHES DEEP.

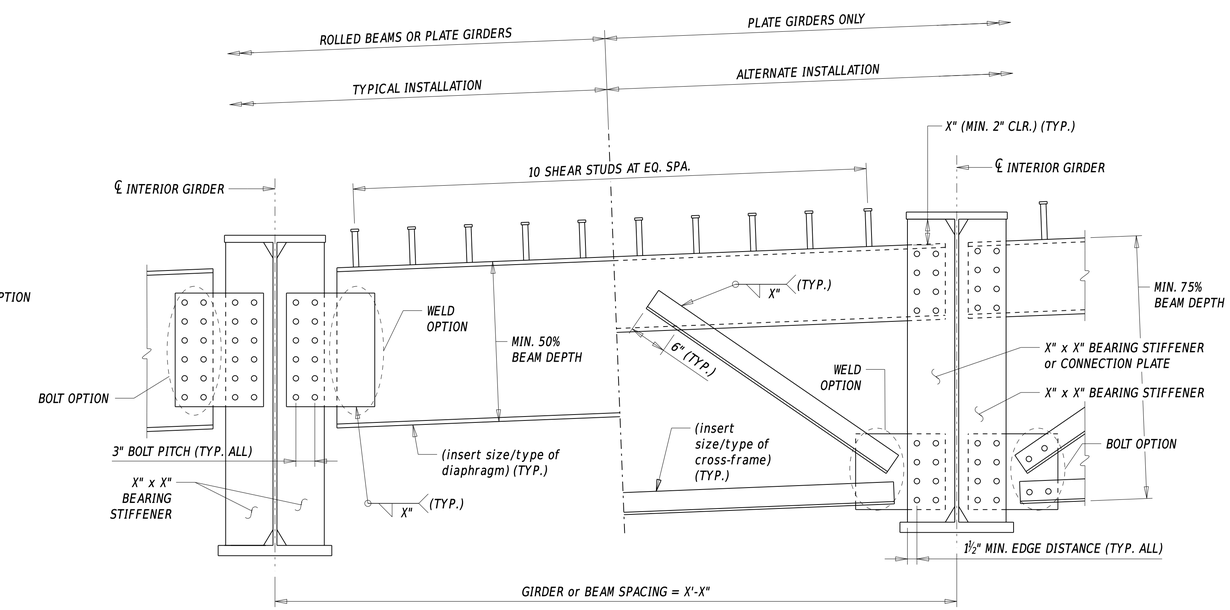

END DIAPHRAGM or END CROSS-FRAME DETAILS

NOTE: EXAMPLE SHOWN USING W-BEAM DIAPHRAGMS AT 'TYPICAL INSTALLATION' AND L-SHAPE AND C-CHANNEL AT 'ALTERNATE INSTALLATION. 'TYPICAL INSTALLATION' IS THE PREFERRED METHOD FOR PURPOSE OF FUTURE JACKING. IN THIS CASE, USE OF MC-CHANNEL OR W-BEAM ARE PREFERRED FOR END DIAPHRAGMS. HOWEVER IF ACCOMMODATIONS FOR FUTURE JACKING CAN BE ACHIEVED UNDER THE GIRDER, THE 'ALTERNATE INSTALLATION' MAY BE CONSIDERED. See Designer Note 6.

DESIGNER NOTES

1. REFER TO SECTION 106.8 FOR GENERAL INFORMATION ON STEEL SUPERSTRUCTURE DESIGN CONSIDERATIONS.
2. REFER TO SECTION 615 IN THE STANDARD SPECIFICATIONS TO ENSURE THERE IS NO NEED TO ADD PROJECT SPECIFIC BEAM NOTES ON BEAM DETAIL SHEETS.
3. REFER TO DETAIL NO. 335.01 - 'STEEL BEAM BRIDGE DETAILS' FOR MORE INFORMATION ON INTERMEDIATE AND END DIAPHRAGMS BETWEEN STEEL BEAMS, SHEAR STUDS, BEARING STIFFENERS, CONNECTION PLATES, AND OTHER MISCELLANEOUS BEAM DETAILS.
4. REFER TO SECTIONS 106.8.5 AND 106.8.8.2 FOR MORE INFORMATION ON INTERMEDIATE DIAPHRAGM, CROSS BRACING, AND END DIAPHRAGM LAYOUT.
5. FOR CHECK ASSEMBLY REQUIREMENTS, THE DESIGNER IS REFERRED TO A6.7.2; STANDARD SPECIFICATION SECTION 615.3.B.1 AND 615.3.C.3; AND AASHTO/NSBA STEEL BRIDGE COLLABORATION S2.1 STEEL FABRICATION GUIDE SECTION 7 FOR MORE INFORMATION.
6. EXAMPLE USED IN FRAMING PLAN ASSUMES A NINE-GIRDER TWO-SPAN BRIDGE WITH SKEWED LEFT-MOST ABUTMENT AND PIER/RIGHT-MOST ABUTMENT WITH A ZERO SKEW.
7. THE FOLLOWING MUST BE SHOWN ON THE FRAMING PLAN IF PRESENT ON THE BRIDGE: MODIFIED DIAPHRAGMS/UTILITY SUPPORTS FOR CONDUITS (TYPE & SPA.), CONDUITS, LIGHT POLES, AND SCUPPERS.

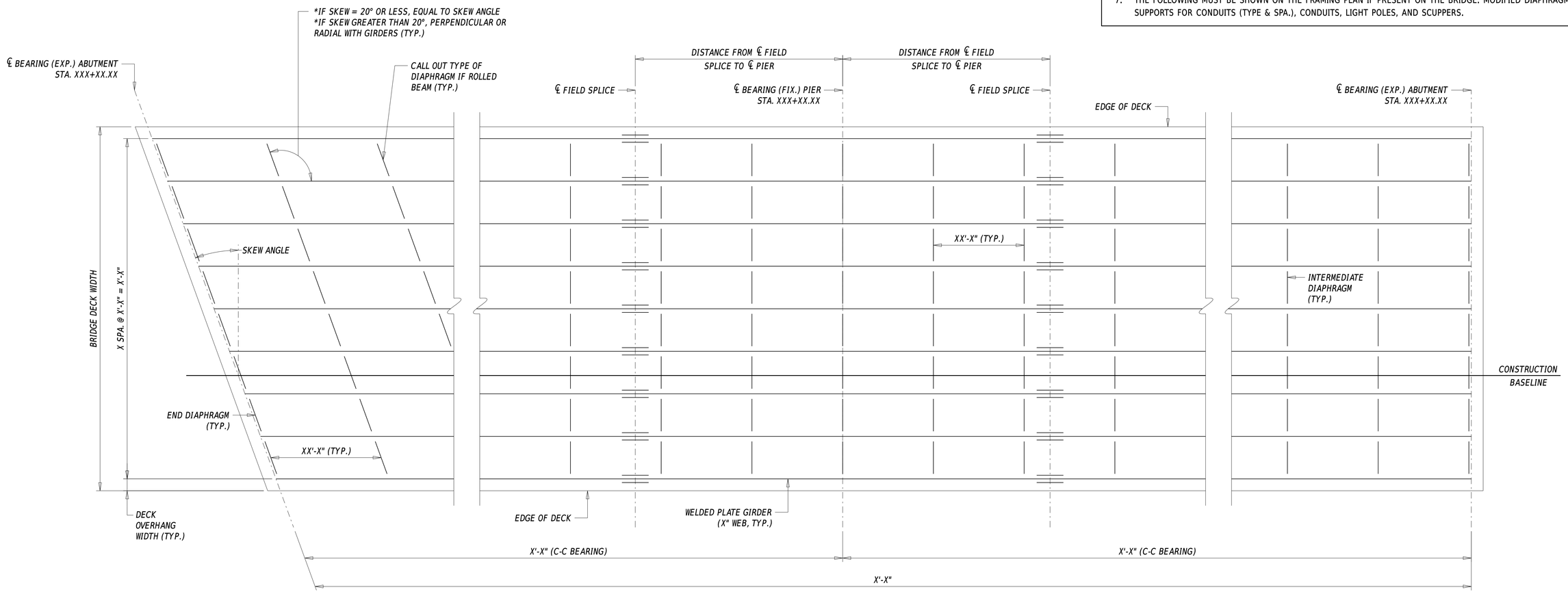

FRAMING PLAN

DELAWARE DEPARTMENT OF TRANSPORTATION BRIDGE DESIGN MANUAL	STEEL BEAM FRAMING PLAN DETAILS	NOT TO SCALE	ISSUE DATE 10/01/2015 10/01/2017 2022	DETAIL No. 335.02 SHEET No. 1 of 1

STEEL BEAM CAMBER NOTES:

1. *ALL GIRDERS SHALL BE CAMBERED FOR DEAD LOAD ORDINATES TO THE DIMENSIONS SHOWN ON THESE PLANS. THE CAMBER TOLERANCE IS ZERO UNDER TO ¾ INCH OVER.*
2. *AFTER THE ERECTION OF STEEL AND THE CONNECTIONS OF THE STEEL CROSS FRAMES ARE COMPLETE, THE CONTRACTOR SHALL OBTAIN ELEVATIONS AT TENTH POINTS ON THE TOP FLANGES OF ALL GIRDERS TO DETERMINE THE REQUIRED HAUNCH THICKNESS. ALL OF THE DATA SHALL BE SUBMITTED WITH DETAILS OF STAY-IN-PLACE FORMS FOR REVIEW AND APPROVAL BY THE ENGINEER IN THE FIELD.*
3. *AFTER THE ERECTION OF STEEL AND THE CONNECTIONS OF THE STEEL CROSS FRAMES ARE COMPLETE, THE CONTRACTOR SHALL VERIFY THAT ALL UNDERCLEARANCES ARE SUFFICIENT AFTER SUBTRACTING THE CALCULATED TOTAL DEAD LOAD DEFLECTION.*
4. *VARY THICKNESS OF HAUNCH TO ACCOUNT FOR ANY INACCURACIES IN CAMBER.*

LEGEND:

DLS = DENOTES DEFLECTION DUE TO STRUCTURAL STEEL

DLC = DENOTES DEFLECTION DUE TO CONCRETE DECK SLAB, HAUNCH, & S.I.P. FORMS

SDL = DENOTES DEFLECTION DUE TO BARRIER, SAFETY FENCE & FUTURE WEARING SURFACE

TD&C = DENOTES TOTAL DEAD LOAD DEFLECTION & CAMBER

VCO = DENOTES CAMBER FOR VERTICAL CURVE ORDINATE DUE TO ROADWAY PROFILE

DESIGNER NOTES

1. STEEL BEAM CAMBER DETAILS MUST BE INCLUDED IN ALL PLAN SETS FOR BRIDGES UTILIZING STEEL BEAMS OR STEEL GIRDERS.
2. RELEVANT STEEL BEAM CAMBER NOTES MUST BE INCLUDED IN ALL PLAN SETS FOR BRIDGES UTILIZING STEEL BEAMS OR STEEL GIRDERS. ADD ANY PROJECT-SPECIFIC NOTES AS NECESSARY.
3. THE DEFLECTION AND TOTAL CAMBER TABLE MUST INCLUDE RELEVANT INFORMATION AT TENTH POINTS.
4. THE EXAMPLE CAMBER DIAGRAM AND THE DEFLECTION AND TOTAL CAMBER TABLE AS SHOWN ASSUMES A TWO SPAN BRIDGE WITH 5 GIRDERS. MODIFY THE CAMBER DIAGRAM AND THE DEFLECTION AND TOTAL CAMBER TABLE AS NECESSARY TO ENSURE THE DETAILS ARE PROJECT SPECIFIC.

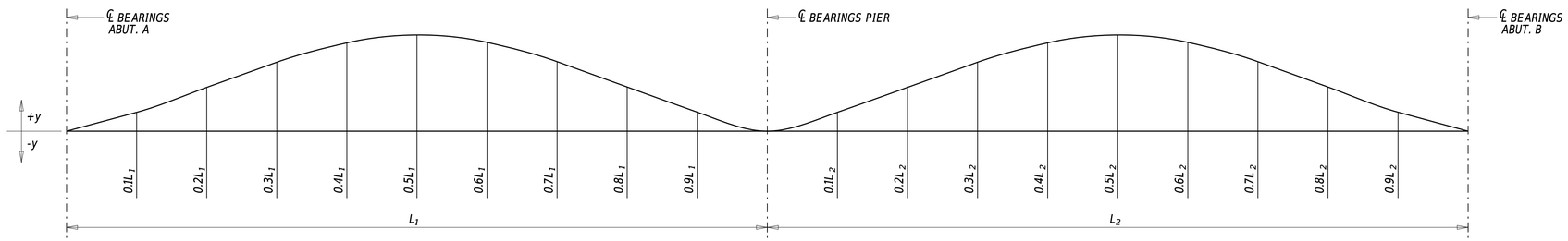

DEFLECTION AND TOTAL CAMBER (INCHES)

PROPOSED GIRDERS		℄ BRG. ABUT. A	$0.1L_1$	$0.2L_1$	$0.3L_1$	$0.4L_1$	$0.5L_1$	$0.6L_1$	$0.7L_1$	$0.8L_1$	$0.9L_1$	℄ BRG. PIER	$0.1L_2$	$0.2L_2$	$0.3L_2$	$0.4L_2$	$0.5L_2$	$0.6L_2$	$0.7L_2$	$0.8L_2$	$0.9L_2$	℄ BRG. ABUT. B
GIRDER 1	DLS	--	--	--	--	--	--	--	--	--	--	--	--	--	--	--	--	--	--	--	--	--
	DLC	--	--	--	--	--	--	--	--	--	--	--	--	--	--	--	--	--	--	--	--	--
	SDL	--	--	--	--	--	--	--	--	--	--	--	--	--	--	--	--	--	--	--	--	--
	TD & C	--	--	--	--	--	--	--	--	--	--	--	--	--	--	--	--	--	--	--	--	--
	VCO	--	--	--	--	--	--	--	--	--	--	--	--	--	--	--	--	--	--	--	--	--
	TD & C + VCO	--	--	--	--	--	--	--	--	--	--	--	--	--	--	--	--	--	--	--	--	--
GIRDER 2	DLS	--	--	--	--	--	--	--	--	--	--	--	--	--	--	--	--	--	--	--	--	--
	DLC	--	--	--	--	--	--	--	--	--	--	--	--	--	--	--	--	--	--	--	--	--
	SDL	--	--	--	--	--	--	--	--	--	--	--	--	--	--	--	--	--	--	--	--	--
	TD & C	--	--	--	--	--	--	--	--	--	--	--	--	--	--	--	--	--	--	--	--	--
	VCO	--	--	--	--	--	--	--	--	--	--	--	--	--	--	--	--	--	--	--	--	--
	TD & C + VCO	--	--	--	--	--	--	--	--	--	--	--	--	--	--	--	--	--	--	--	--	--
GIRDER 3	DLS	--	--	--	--	--	--	--	--	--	--	--	--	--	--	--	--	--	--	--	--	--
	DLC	--	--	--	--	--	--	--	--	--	--	--	--	--	--	--	--	--	--	--	--	--
	SDL	--	--	--	--	--	--	--	--	--	--	--	--	--	--	--	--	--	--	--	--	--
	TD & C	--	--	--	--	--	--	--	--	--	--	--	--	--	--	--	--	--	--	--	--	--
	VCO	--	--	--	--	--	--	--	--	--	--	--	--	--	--	--	--	--	--	--	--	--
	TD & C + VCO	--	--	--	--	--	--	--	--	--	--	--	--	--	--	--	--	--	--	--	--	--
GIRDER 4	DLS	--	--	--	--	--	--	--	--	--	--	--	--	--	--	--	--	--	--	--	--	--
	DLC	--	--	--	--	--	--	--	--	--	--	--	--	--	--	--	--	--	--	--	--	--
	SDL	--	--	--	--	--	--	--	--	--	--	--	--	--	--	--	--	--	--	--	--	--
	TD & C	--	--	--	--	--	--	--	--	--	--	--	--	--	--	--	--	--	--	--	--	--
	VCO	--	--	--	--	--	--	--	--	--	--	--	--	--	--	--	--	--	--	--	--	--
	TD & C + VCO	--	--	--	--	--	--	--	--	--	--	--	--	--	--	--	--	--	--	--	--	--
GIRDER 5	DLS	--	--	--	--	--	--	--	--	--	--	--	--	--	--	--	--	--	--	--	--	--
	DLC	--	--	--	--	--	--	--	--	--	--	--	--	--	--	--	--	--	--	--	--	--
	SDL	--	--	--	--	--	--	--	--	--	--	--	--	--	--	--	--	--	--	--	--	--
	TD & C	--	--	--	--	--	--	--	--	--	--	--	--	--	--	--	--	--	--	--	--	--
	VCO	--	--	--	--	--	--	--	--	--	--	--	--	--	--	--	--	--	--	--	--	--
	TD & C + VCO	--	--	--	--	--	--	--	--	--	--	--	--	--	--	--	--	--	--	--	--	--

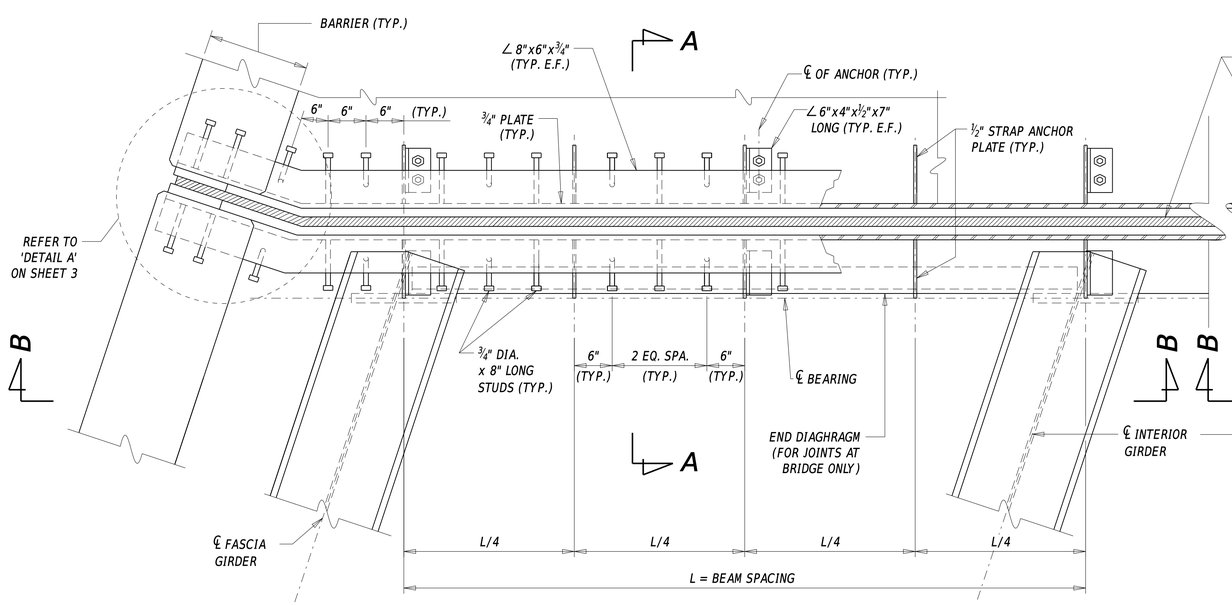

TYPICAL JOINT PLAN WITH SKEW

(EXAMPLE SHOWN USING STEEL GIRDERS TO ABUTMENT BACKWALL)

NOTE: POTENTIAL SHARED USER PATH UTILIZING INTERIOR BARRIER NOT SHOWN FOR CLARITY. REFER TO SECTION B-B.

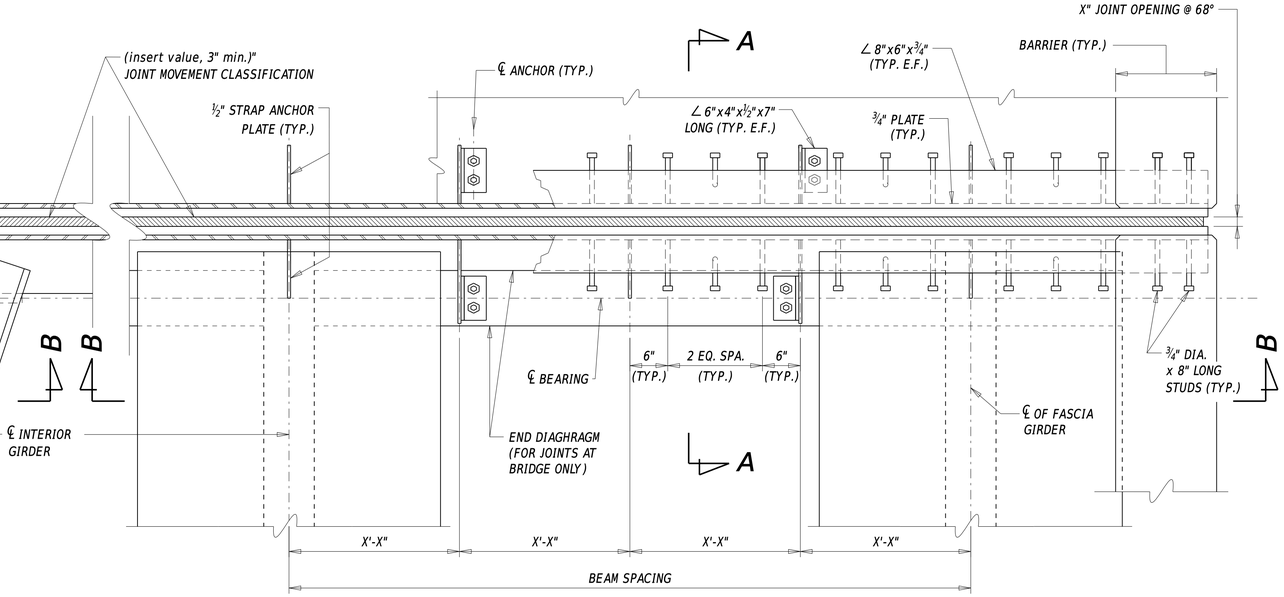

TYPICAL JOINT PLAN WITH NO SKEW

(EXAMPLE SHOWN USING PCEF GIRDERS TO ABUTMENT BACKWALL)

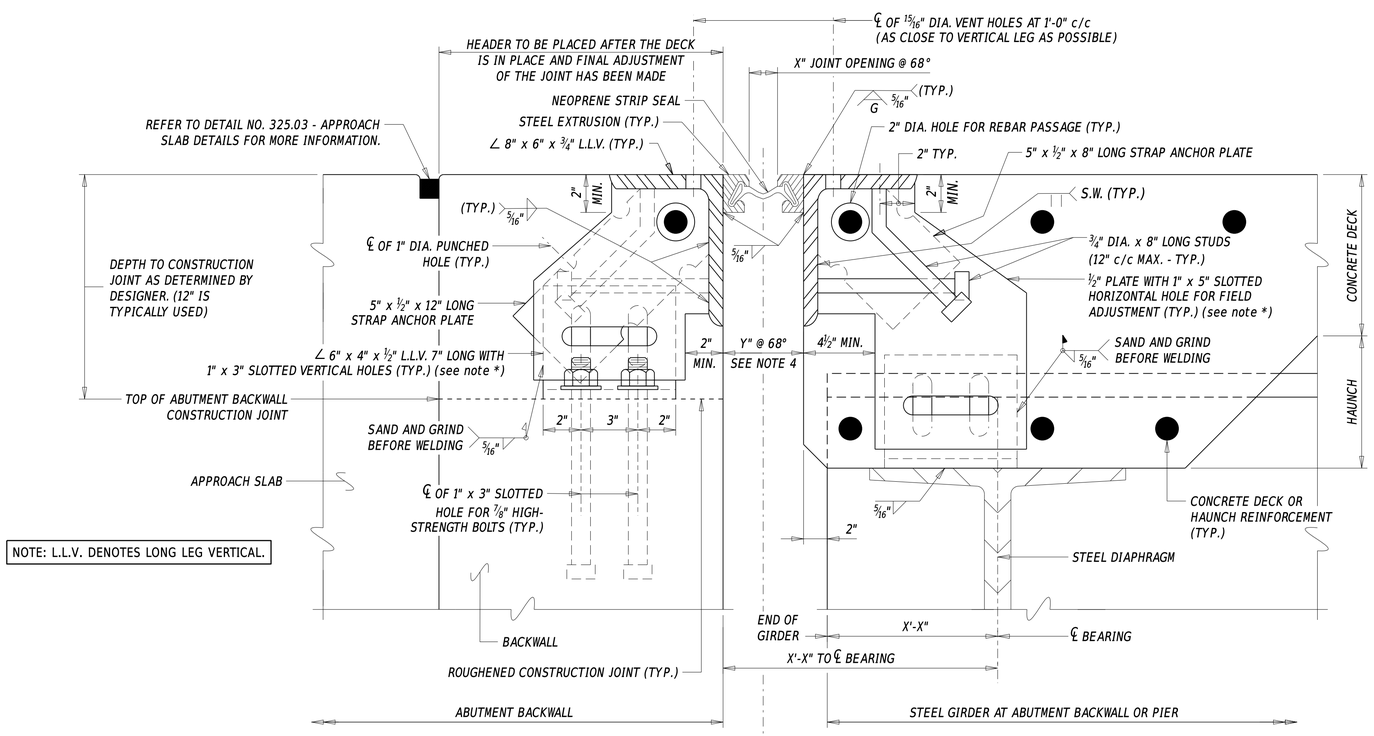

SECTION A-A (STEEL GIRDER)

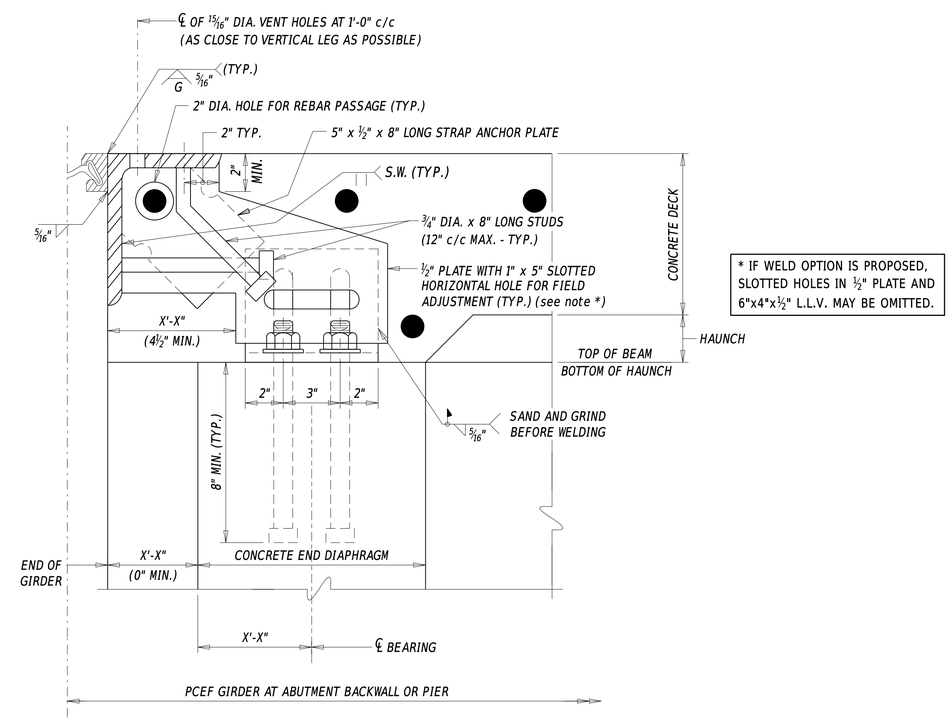

SECTION A-A (HALF-SECTION PCEF GIRDER)

* IF WELD OPTION IS PROPOSED, SLOTTED HOLES IN ½" PLATE AND 6"x4"x½" L.L.V. MAY BE OMITTED.

NOTE: LONGITUDINAL DECK REINFORCEMENT AND SHEAR STUDS NOT SHOWN FOR CLARITY. EXAMPLE DETAIL IN SECTION A-A SHOWS 6"x4"x½" L.L.V. WELDED ONTO THE STEEL DIAPHRAGM. ALTERNATIVELY IT MAY BE BOLTED. IF C-CHANNELS ARE USED AS DIAPHRAGMS, THE FLANGES MUST FACE AWAY FROM THE BACKWALL.

DELDOT BRIDGE DESIGN SECTION	DELAWARE DEPARTMENT OF TRANSPORTATION BRIDGE DESIGN MANUAL	STRIP SEAL EXPANSION JOINT DETAILS	NOT TO SCALE	ISSUE DATE 10/01/2015 10/01/2016
				DETAIL No. 340.01 SHEET No. 1 of 3

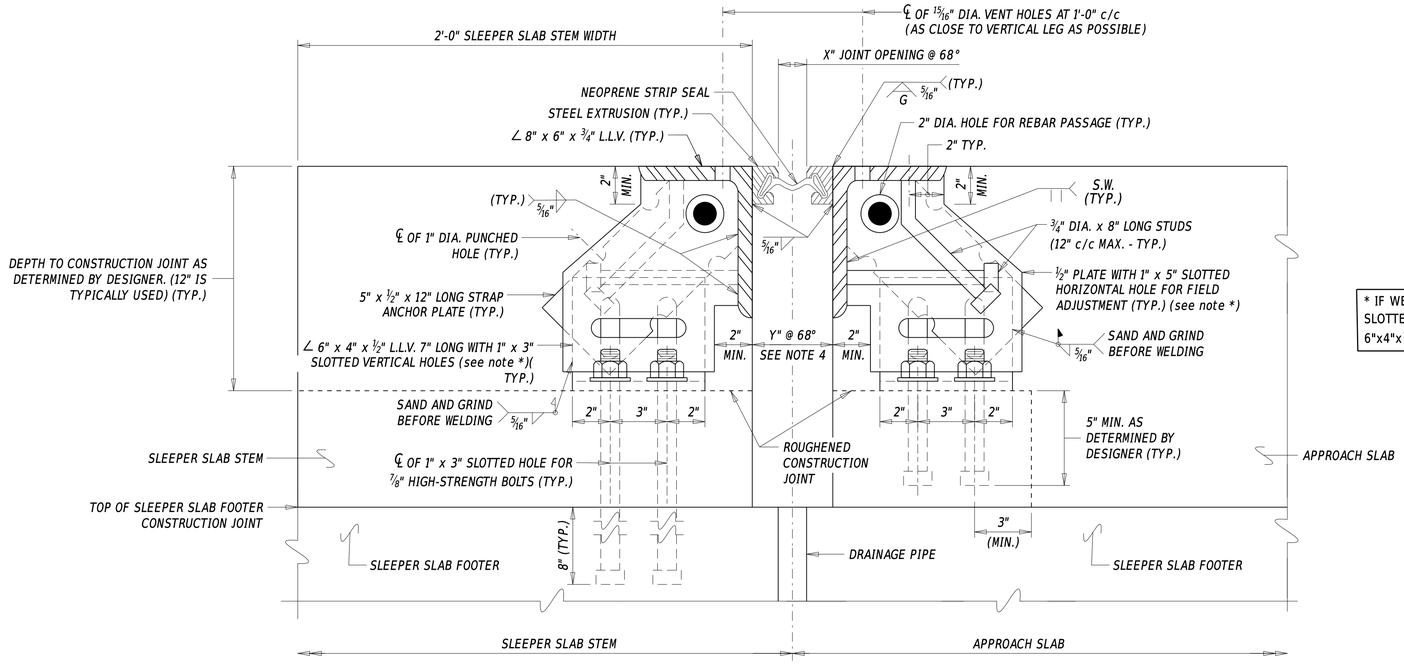

* IF WELD OPTION IS PROPOSED, SLOTTED HOLES IN 1/2" PLATE AND 6"x4"x1/2" L.L.V. MAY BE OMITTED.

SECTION A-A (APPROACH SLAB TO SLEEPER SLAB)

NOTE: REMAINING SLEEPER SLAB AND APPROACH SLAB REINFORCEMENT NOT SHOWN FOR CLARITY. REFER TO DETAIL NO. 325.03 - APPROACH SLAB DETAILS AND 325.05 - SLEEPER SLAB DETAILS FOR MORE INFORMATION.

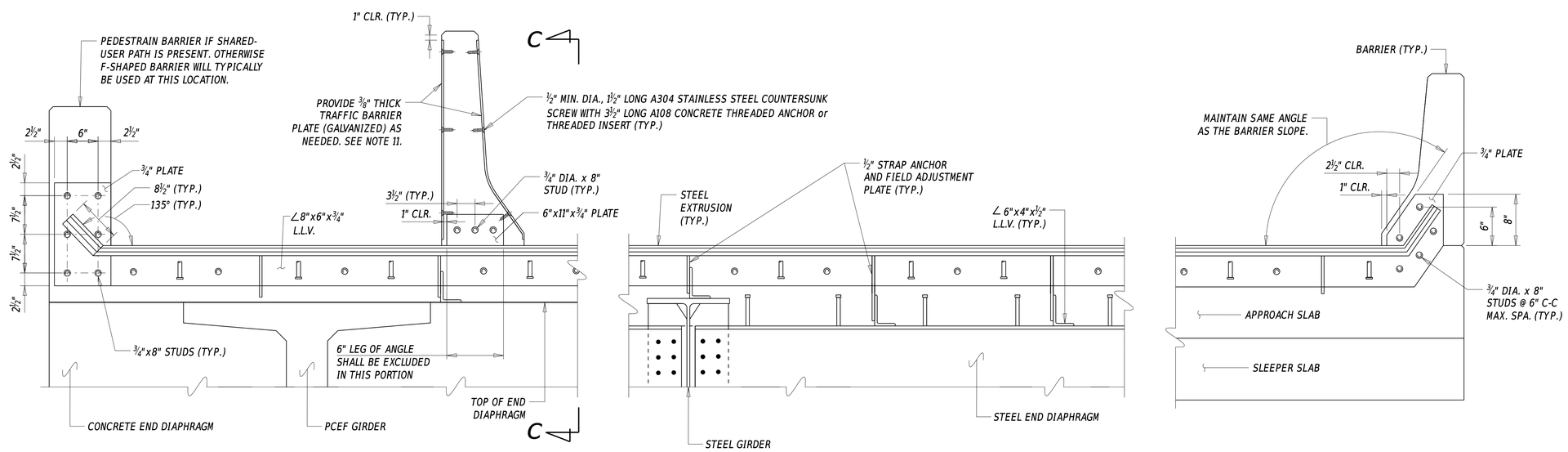

SECTION (B-B)

NOTE: CROSS SLOPE AND ANCHOR BOLTS NOT SHOWN FOR CLARITY. POTENTIAL TRAFFIC BARRIER PLATES SHOWN ONLY AT INTERIOR BARRIER FOR CLARITY. ALSO THE EXAMPLE UTILIZES SHARED USER PATH WITH AN ADDITIONAL BARRIER.

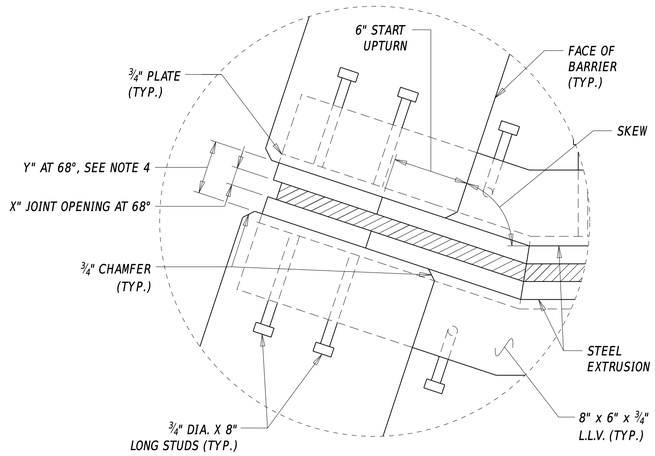

DETAIL A

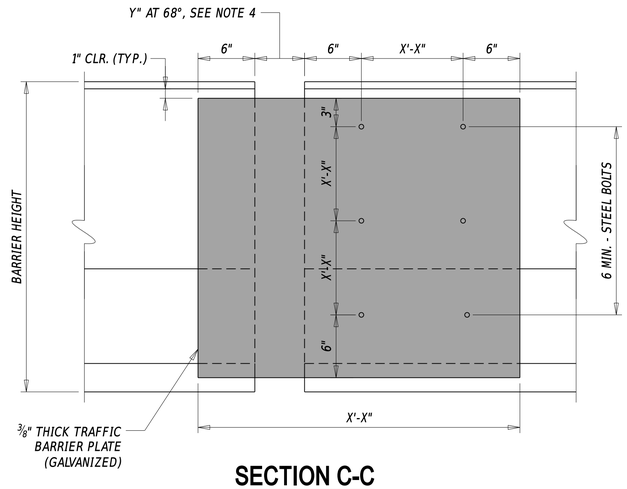

SECTION C-C

NOTE: STRUCTURAL COMPONENTS BELOW BARRIER NOT SHOWN FOR CLARITY.

STRIP SEAL EXPANSION JOINT NOTES

1. STEEL FOR DECK JOINTS AND STEEL EXTRUSIONS SHALL BE AASHTO M270, GR. 36 (ASTM A36) AT MINIMUM.
2. NEOPRENE EXTRUSION TO MEET ASTM D2628-91 MODIFIED, (RECOVERY TESTS EXCLUDED).
3. THE EXPANSION JOINT SHALL BE CAPABLE OF SEALING THE DECK TO PREVENT MOISTURE AND OTHER CONTAMINANTS FROM DESCENDING THROUGH THE JOINT.
4. THE CONTRACTOR SHALL ADJUST THE OPEN JOINT (defined as 'Y') AS REQUIRED BY THE WIDTH OF THE STEEL EXTRUSION USED SO AS TO PROVIDE A (insert design joint opening)" JOINT OPENING AT 68°F.
5. THE STRIP SEAL SHALL BE INSTALLED IN ONE PIECE ACROSS THE BRIDGE WIDTH. SPLICING OF THE STRIP SEAL IS NOT PERMITTED.
6. THE EXPANSION JOINT SYSTEM IS PAID FOR UNDER (insert appropriate 'prefabricated expansion joint system' item).
7. ENTIRE EXPANSION DAM SHALL BE GALVANIZED IN ACCORDANCE WITH SECTION 624 OF THE STANDARD SPECIFICATIONS.
8. LUBRICANT-ADHESIVE FOR USE IN INSTALLING AND BONDING NEOPRENE SEAL ELEMENTS TO STEEL JOINT COMPONENTS SHALL BE A ONE QUART MOISTURE-CURING POLYURETHANE AND HYDROCARBON SOLVENT MIXTURE HAVING THE FOLLOWING PHYSICAL PROPERTIES:

AVERAGE WEIGHT, POUNDS PER GALLON	8± 10%
SOLIDS CONTENT	65%
ADHESIVE SHALL REMAIN LIQUID FROM	5°F TO 120°F
FILM STRENGTH, AS PER ASTM D-412	2,000 PSI
ELONGATION	250%

9. HOLES SHALL BE PLACED IN THE RIB PLATES AND STRAP ANCHOR PLATES FOR BAR REINFORCEMENT. IF THIS IS DONE IN THE FIELD, TOUCH-UP THE HOLES IN ACCORDANCE WITH ASTM A780. PAYMENT INCIDENTAL TO (insert appropriate 'prefabricated expansion joint system' item).
10. ANCHOR PLATE AND STEEL EXTRUSION SHALL BE WELDED TO BE WATERTIGHT AT CONSTRUCTION JOINTS. PAYMENT INCIDENTAL TO (insert appropriate 'prefabricated expansion joint system' item).
11. WHERE TRAFFIC BARRIER PLATES ARE USED:
    -SUCH BARRIERS ARE REQUIRED WHERE THE OPEN JOINT AS DESCRIBED IN NOTE 4 IS FOUR INCHES OR WIDER.
    -USE TYPE 316 STAINLESS STEEL COUNTERSUNK FLATHEAD SCREWS WITH ASTM A108 CONCRETE THREADED ANCHOR or THREADED INSERT.
    -THE HEAD OF SCREWS SHALL BE FLUSH WITH FACE OF STEEL PLATE.
    -THE CONTRACTOR SHALL SUBMIT WORKING DRAWINGS OF TRAFFIC BARRIER PLATES FOR APPROVAL.
12. AT AREAS WHERE STEEL MEMBERS ARE TO BE SPLICED, USE OF COMPLETE JOINT PENETRATION (CJP) AND PARTIAL JOINT PENETRATION (PJP) WELD ARE BOTH PERMITTED. THE THICKNESS OF PJP WELD MUST BE MINIMUM HALF OF THE STEEL MEMBER THICKNESS.
13. (phasing only) THE CONTRACTOR SHALL SUBMIT A WORKING PLAN FOR PLACEMENT OF STRIP SEAL DUE TO PHASING.

DESIGNER NOTES

1. APPLICABLE STRIP SEAL EXPANSION JOINT DETAIL NOTES ARE REQUIRED TO BE SHOWN IN THE PLAN SET.
2. JOINT OPENING TABLE MUST BE SHOWN IN THE PLAN SET.
3. REFER TO SECTIONS 106.6.2 AND 109.7 FOR MORE INFORMATION ON STRIP SEAL EXPANSION JOINT DESIGN.
4. MAXIMUM JOINT OPENING FOR USE OF STRIP SEAL EXPANSION JOINTS SHOULD BE LIMITED TO 4 INCHES. IF THE JOINT OPENING IS GREATER THAN 4", CONSIDER USING FINGER OR MODULAR JOINTS.
5. UNDER PLAN VIEWS ON FIRST SHEET, THE EXAMPLE UTILIZES JOINTS ON BRIDGE (CONCRETE DECK TO ABUTMENT BACKWALL). REVISE AS NECESSARY FOR JOINTS AT PIERS OR APPROACH SLAB TO SLEEPER SLAB.
6. BLOCKOUTS ARE NOT INCLUDED IN SECTIONS A-A OF THIS DETAIL. THE USE OF BLOCKOUTS ARE TYPICALLY LIMITED TO DECK JOINT REPLACEMENTS ONLY. BLOCKOUTS ARE NOT TYPICALLY USED FOR NEW DECKS OR FULL DECK REPLACEMENTS.

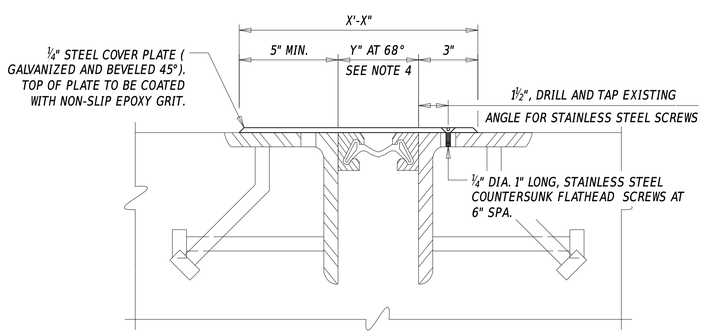

JOINT SECTION AT SIDEWALK

(BRIDGES WITH SIDEWALK)

NOTE:
-ALL STEEL MUST BE ASTM A709, GRADE 36 or 50 AND HOT-DIPPED GALVANIZED IN ACCORDANCE WITH ASTM A123.
-APPLY EPOXY COATING ON BOTH SIDES OF THE STEEL COVER PLATE. THE TOP OF PLATE (WALKING SURFACE) MUST RECEIVE NON-SLIP EPOXY GRIT COATING IN ACCORDANCE WITH ADA A4.5.

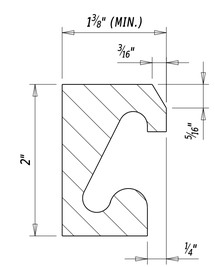

STEEL EXTRUSION DETAIL

JOINT OPENING (INCH)						
LOCATION	TEMPERATURE (°F)					MOVEMENT CLASSIFICATION
	10	30	50	70	90	
XXXXXXXXXX	X	X	X	X	X	X"
XXXXXXXXXX	X	X	X	X	X	X"
XXXXXXXXXX	X	X	X	X	X	X"

DELDOT BRIDGE DESIGN SECTION	DELAWARE DEPARTMENT OF TRANSPORTATION BRIDGE DESIGN MANUAL	STRIP SEAL EXPANSION JOINT DETAILS	NOT TO SCALE

ISSUE DATE		
10/01/2015	01/31/2019	DETAIL No. 340.01
10/01/2016	04/01/2021	SHEET No. 3 of 3
10/01/2017		

STEEL REINFORCED ELASTOMERIC BEARING NOTES:

1. PROVIDE ALL STEEL REINFORCED ELASTOMERIC BEARINGS IN ACCORDANCE WITH SECTION 623 - 'BEARING DEVICES' OF THE STANDARD SPECIFICATIONS.

2. (steel beams or steel girders only) PROVIDE GALVANIZED ANCHOR BOLTS IN ACCORDANCE WITH ASTM F1554, WASHERS IN ACCORDANCE WITH ASTM F436, AND NUTS IN ACCORDANCE WITH ASTM A563. SET NUTS ¼" CLEAR OF SOLE PLATES AND BURR THREADS ABOVE AND BELOW NUTS.

3. (steel beams or steel girders only) USE SWEDGED ANCHOR BOLTS. BOLTS MAY BE CAST-IN-PLACE OR GROUTED IN PREFORMED (SLEEVED OR DRILLED) HOLES. SLEEVED HOLES SHALL BE CORRUGATED TO PREVENT SLIPPAGE. THE PREFORMED HOLES SHALL HAVE A DIAMETER OF 6". WHEN DRILLING HOLES, DO NOT COME INTO CONTACT WITH THE REINFORCING BARS.

4. (steel beams or steel girders only) SOLE PLATES SHALL BE AASHTO M270, GRADE 50 or 50W (ASTM A709, GRADE 50 or 50W) AND TO BE BEVELED TO MATCH GRADE WHEN GRADE EXCEEDS 1 PERCENT. STEEL SURFACES OF SOLE PLATES TO BE MACHINE FINISHED AS SHOWN IN THE DETAILS, MEASURED IN ACCORDANCE WITH ANSI B46.1.

5. (steel beams or steel girders only) SOLE PLATES SHALL MEET A FLATNESS REQUIREMENT OF 0.5 PERCENT IN THE DIRECTION BEING MEASURED (WIDTH, LENGTH, AND DIAGONALS) MAXIMUM, BUT NOT TO EXCEED ⅛".

6. BEARING SHALL BE PLACED NORMAL TO CENTERLINE OF BEAM.

7. (steel beams or steel girders only) FILL SLOTS AND HOLES AROUND ANCHOR BOLTS WITH AN APPROVED NON-HARDENING CAULKING COMPOUND OR ELASTIC JOINT SEALER.

8. (steel beams or steel girders only) FOR EXPANSION BEARINGS:
   -USE (insert value ⅝" larger than bolt dia.)" x (min. 3" as per design) SLOTS IN SOLE PLATE AND ⅜" x 3" x (min. 5½" as per design) WASHERS WITH (insert value 1/16" larger than bolt dia.)" DIA. HOLE IN WASHERS.

   FOR FIXED BEARINGS
   -USE (insert value ⅝" larger than bolt dia.)" DIA. HOLES IN SOLE PLATE AND ⅜" x 3" DIA. WASHERS WITH (insert value 1/16" larger than bolt dia.)" DIA. HOLE IN WASHER.

9. (typical for projects that have no need to secure against walking) STEEL REINFORCED ELASTOMERIC BEARINGS SHALL BE ATTACHED TO THE TOP OF MASONRY PAD or TOP OF CONCRETE PEDESTAL WITH AN APPROVED EPOXY ADHESIVE IN ACCORDANCE WITH SECTION 623.3.D.4 OF THE STANDARD SPECIFICATIONS IN SUCH A WAY THAT VISIBLE CONCRETE SURFACES WILL NOT BE STAINED. ENSURE THE EPOXY ADHESIVE HAS SET PRIOR TO PLACEMENT OF BEAMS.

10. (modify as needed) FABRICATION AND INSTALLATION OF STEEL REINFORCED ELASTOMERIC BEARINGS PAID UNDER ITEM 623005 - STEEL REINFORCED BEARINGS. FABRICATION AND INSTALLATION OF ANCHOR BOLTS, NUTS, WASHERS, AND SOLE PLATES SHALL BE INCIDENTAL TO (insert appropriate beam or steel structures item number).

ELASTOMERIC BEARING NOTES:

1. x TOTAL ELASTOMERIC BEARINGS REQUIRED.

2. ALL ELASTOMERIC BEARINGS SHALL BE 50 MIN. DUROMETER IN ACCORDANCE WITH REQUIREMENTS SPECIFIED IN SECTION 623 OF THE STANDARD SPECIFICATIONS.

3. ELASTOMERIC BEARINGS SHALL BE ATTACHED TO THE TOP OF ABUTMENT SEAT and/or TOP OF PIER CAP WITH AN APPROVED EPOXY ADHESIVE IN ACCORDANCE WITH SECTION 623.3.D.4 OF THE STANDARD SPECIFICATIONS IN SUCH A WAY THAT VISIBLE CONCRETE SURFACES WILL NOT BE STAINED. ENSURE THE EPOXY ADHESIVE HAS SET PRIOR TO PLACEMENT OF BEAMS.

4. FABRICATION AND INSTALLATION OF ELASTOMERIC BEARINGS PAID UNDER ITEM 623000 ELASTOMERIC BEARINGS.

STEEL REINFORCED ELASTOMERIC BEARING SCHEDULE

LOCATION	BEARING DESIGNATION						LAMINATED ELASTOMERIC BEARING					
	MARK	TYPE	NEOPRENE HARDNESS (SHORE A)	TOTAL NO. REQD.	CAPACITY PER PAD		DIMENSION					TOTAL PAD THICKNESS 'T'
					REACTION ⊗	MOVEMENT ⊠	'L'	'W'	LAYER THICKNESS 'Ti'	LAYER THICKNESS 'Te'	INTERIOR LAYERS	
ABUTMENT A	EX #	EXP.	60± 5 DURO	--	---- KIP	----	---	---	---	---	--	----
PIER	FX #	FIX.	60± 5 DURO	--	---- KIP	N/A	---	---	---	---	--	----
ABUTMENT B	EX #	EXP.	60± 5 DURO	--	---- KIP	----	---	---	---	---	--	----

LEGEND:

⊗ MAX. UN-FACTORED SERVICE 1 REACTION (W/O DYNAMIC LOAD ALLOWANCE).

⊠ TEMPERATURE MOVEMENT.

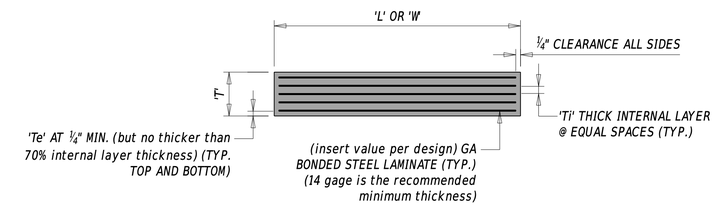

STEEL REINFORCED ELASTOMERIC BEARING ELEVATION

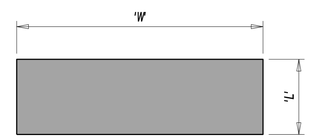

STEEL REINFORCED ELASTOMERIC BEARING PLAN

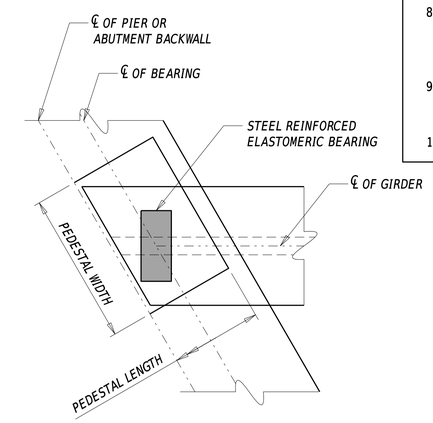

BEARING DETAIL

(PCEF CONCRETE GIRDER)

DESIGNER NOTES

1. REFER TO SECTION 106.10 FOR MORE INFORMATION ON DESIGN AND DETAILING OF STEEL-REINFORCED ELASTOMERIC BEARINGS AND ANCHORAGE TO STRUCTURE (SOLE PLATES, ANCHOR RODS, ETC.)

2. REFER TO SECTION 623 IN THE STANDARD SPECIFICATIONS, CHAPTER 18 OF CURRENT AASHTO LRFD BRIDGE CONSTRUCTION SPECIFICATIONS, AND CHAPTER 14 OF CURRENT AASHTO LRFD BRIDGE DESIGN SPECIFICATIONS FOR MORE INFORMATION ON DESIGN AND FABRICATION OF ELASTOMERIC BEARINGS (BOTH STEEL REINFORCED AND UNREINFORCED).

3. ALL DETAILS, 'STEEL REINFORCED ELASTOMERIC BEARING NOTES', AND 'STEEL REINFORCED ELASTOMERIC BEARING SCHEDULE' WITH EXCEPTION OF THE FOLLOWING:
   - 1" THICK 50 MIN. DUROMETER ELASTOMERIC BEARING DETAILS
   - ELASTOMERIC BEARING NOTES
   AS SHOWN ON THIS SHEET ARE INTENDED FOR SPREAD BEAMS, AND MUST BE SHOWN ON PLAN SHEETS. MODIFY DETAILS, SCHEDULE, AND NOTES ON THE PLAN SHEETS AS NECESSARY TO BE PROJECT-SPECIFIC.

4. FOR ADJACENT BEAMS, THE DESIGNER HAS THE OPTION TO USE 1" THICK 50 MIN. DUROMETER ELASTOMERIC BEARINGS WITH 8" LENGTH AND WIDTH EQUAL TO THE BEAM WIDTH MINUS 2" OR DESIGN A SMALLER (AREA-WISE) STEEL REINFORCED ELASTOMERIC BEARINGS. THE STANDARD PRACTICE IS TO USE THE FIRST OPTION (1" THICK 50 MIN. DUROMETER ELASTOMERIC BEARINGS). NOTE THAT 1" THICK ELASTOMERIC BEARINGS ARE UNREINFORCED, AND IF USED, SUCH DETAILS AND THE 'ELASTOMERIC BEARING NOTES' AS SHOWN ON THIS SHEET MUST BE INCLUDED IN PLAN SHEETS.

5. EXAMPLE USED FOR 'STEEL REINFORCED ELASTOMERIC BEARING SCHEDULE' ASSUMES A TWO SPAN BRIDGE WITH ONE FIXED BEARING LINE AT PIER.

6. THE ELASTOMER COMPOUND FOR BRIDGES IN DELAWARE ARE TYPICALLY CLASSIFIED AS BEING OF LOW TEMPERATURE GRADE 3, WHICH TRANSLATES TO HARDNESS (SHORE A) OF 60. USE OF ANY OTHER GRADES IS NOT RECOMMENDED, AND WILL NEED TO BE JUSTIFIED. A MINIMUM OF 50 DUROMETER IS ALLOWED FOR UNREINFORCED ELASTOMERIC BEARINGS FOR PROJECTS UTILIZING ADJACENT BEAMS.

7. THE DESIGNER SHALL EVALUATE THE NEED FOR PERMANENTLY SECURING BEARING PADS FROM 'WALKING'. THE DETAILS SHOWN ON THIS SHEET DO NOT INCLUDE THESE MEASURES, BUT IF USED, THESE DETAILS MUST BE INCLUDED IN PLAN SETS. REFER TO SECTION 106.10.9 FOR MORE INFORMATION.

8. FOR MORE INFORMATION ON ALLOWABLE ALTERNATIVE BLOCKOUT SIZES, REFER TO SECTIONS 106.10.9.2, 107.4.1.5.3, AND 107.5.3. NOTE THAT POTENTIAL ANCHOR RODS FOR MASONRY PLATES NOT SHOWN IN THIS DETAIL.

9. CONSIDER PROVIDING ADDITIONAL INFORMATION ON PLANS FOR MINIMUM DESIGN ROTATIONAL REQUIREMENTS IN ACCORDANCE WITH SECTION 106.10.12, NOTE 2.

10. FOR MORE INFORMATION ON SOLE PLATE TO STEEL GIRDER CONNECTION, REFER TO SECTION 106.10.9.1.

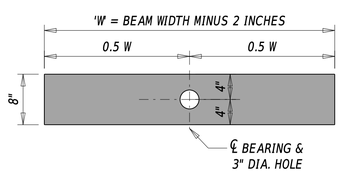

1" THICK 50 MIN. DUROMETER ELASTOMERIC BEARING DETAILS

(ADJACENT BEAMS ONLY)

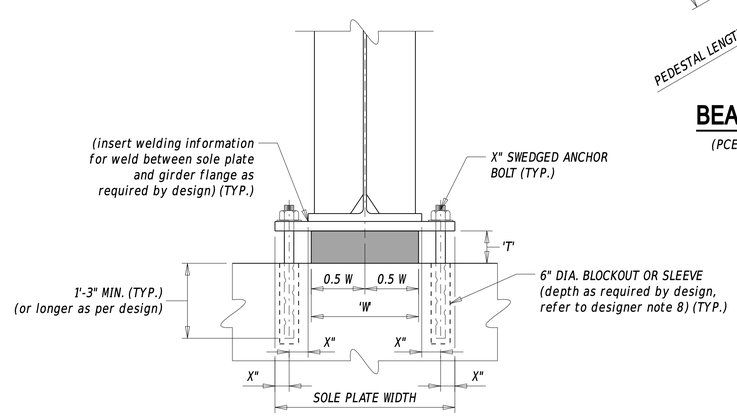

BEARING ELEVATION

(STEEL BEAM or STEEL GIRDER)

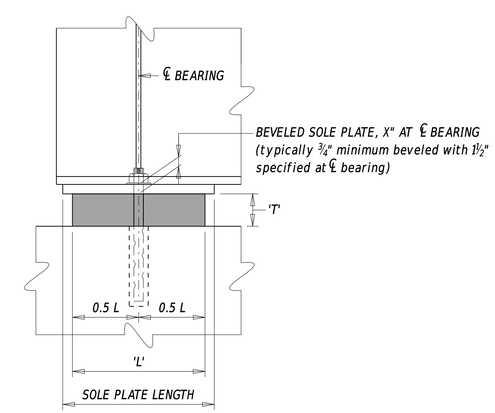

BEARING SIDE ELEVATION

(STEEL BEAM or STEEL GIRDER)

OHW = ORDINARY HIGH WATER
HT = HIGH TIDE

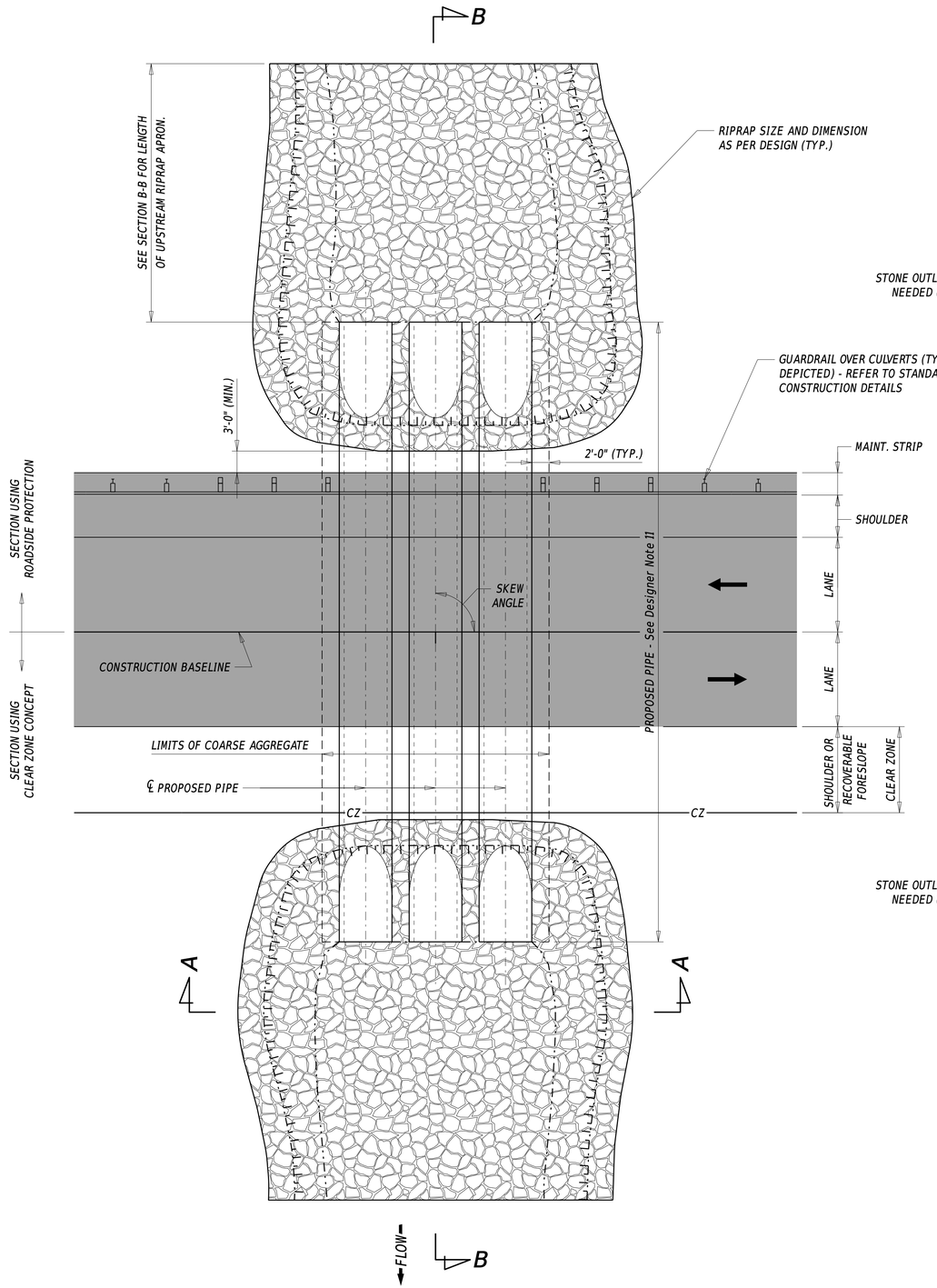

PLAN

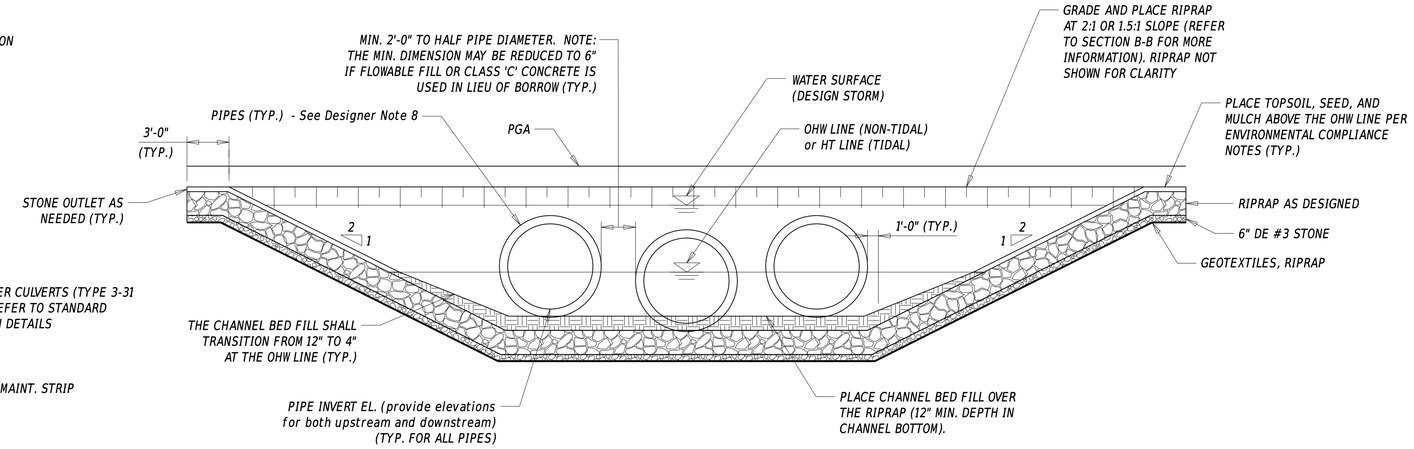

SECTION A-A (WITHOUT LOW-FLOW CHANNEL CONSTRUCTED IN RIPRAP)

NOTE: REFER TO PROJECT SPECIFIC ENVIRONMENTAL COMPLIANCE SHEET(S) FOR FURTHER INFORMATION ON RIPRAP AND TOPSOIL TREATMENT. GUARDRAIL OVER CULVERTS NOT SHOWN FOR CLARITY. FOR MORE INFORMATION ON PIPE INVERTS, SEE DESIGNER NOTE 9.

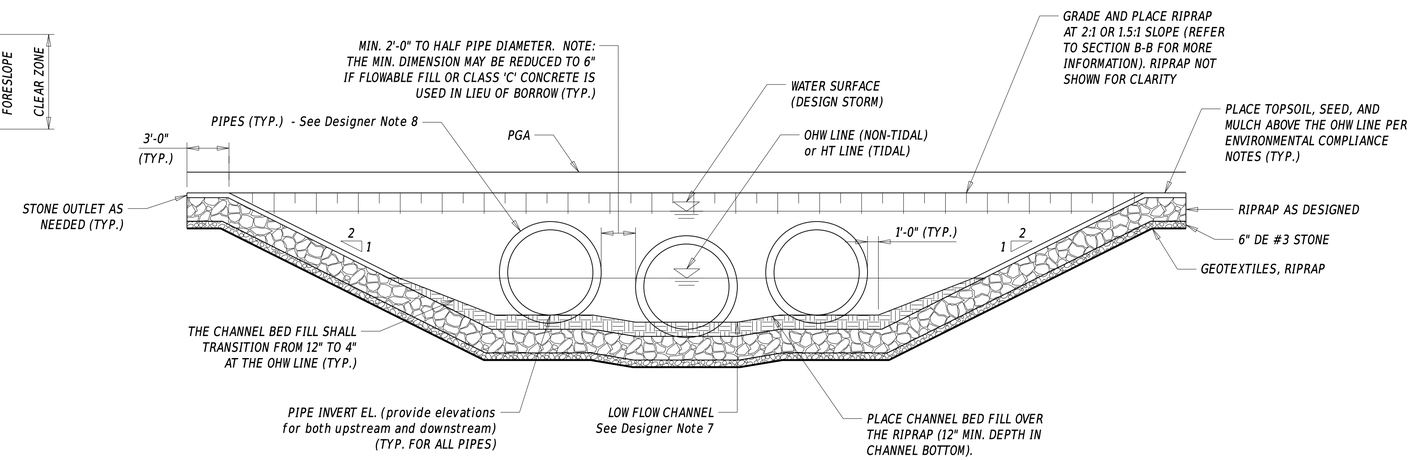

SECTION A-A (WITH LOW-FLOW CHANNEL CONSTRUCTED IN RIPRAP)

NOTE: REFER TO PROJECT SPECIFIC ENVIRONMENTAL COMPLIANCE SHEET(S) FOR FURTHER INFORMATION ON RIPRAP AND TOPSOIL TREATMENT. GUARDRAIL OVER CULVERTS NOT SHOWN FOR CLARITY. FOR MORE INFORMATION ON PIPE INVERTS, SEE DESIGNER NOTE 9.

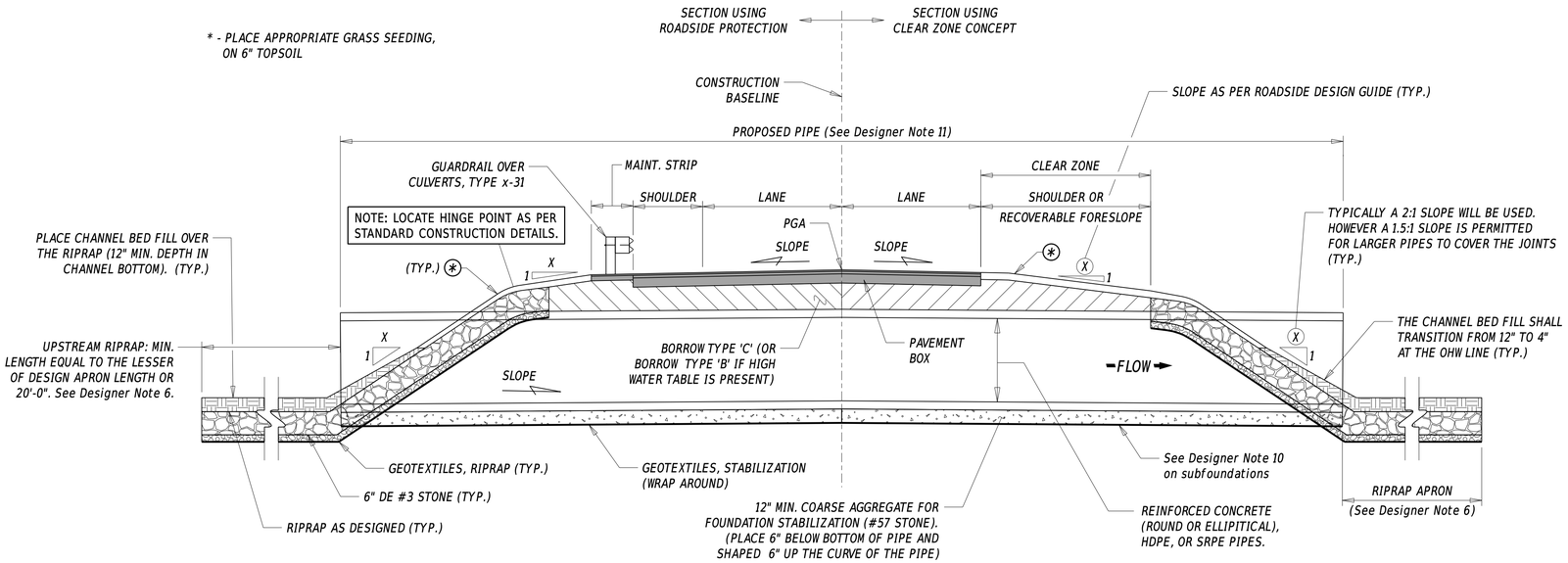

SECTION B-B

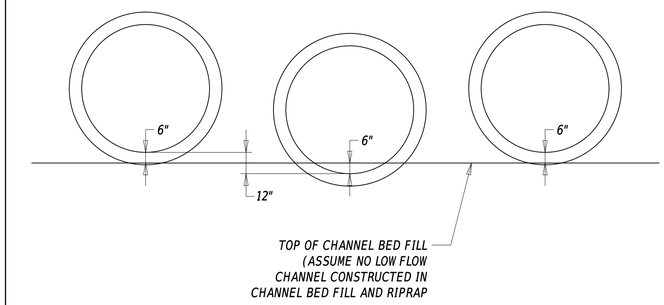

PIPE INVERT DIAGRAM

See Designer Note 9

NOTE: IN CASES WHERE TWO PIPE RUNS ARE USED, ONE PIPE MAY MEET THE REQUIREMENTS OF THE CENTER PIPE AND THE OTHER MEET THE REQUIREMENTS OF THE SIDE PIPES AS SHOWED ABOVE. NOTE THAT NOT IN ALL INSTANCES WILL MULTIPLE RUNS OF PIPES DIFFER IN INVERT ELEVATIONS. CONSULT WITH THE ENVIRONMENTAL STUDIES SECTION FOR RECOMMENDED PIPE INVERTS.

TYPE	CONDITION	MINIMUM COVER (H_{min})
FLEXIBLE PIPE		
THERMOPLASTIC (HDPE) PIPE **	UNDER UNPAVED AREAS	S/8 ≥ 12-INCH *
	UNDER PAVED ROADS	S/2 ≥ 24-INCH *
STEEL-REINFORCED THERMOPLASTIC (SRPE) PIPE		S/5 ≥ 12-INCH *
RIGID PIPE		
REINFORCED CONCRETE PIPE ***	UNDER UNPAVED AREAS OR TOP OF FLEXIBLE PAVEMENT	S/8 ≥ 12-INCH (MEASURED FROM TOP OF FLEXIBLE PAVEMENT OR TOP OF GROUND) *
	UNDER RIGID PAVEMENT	9-INCH (MEASURED FROM BOTTOM OF RIGID PAVEMENT) *

NOTE:

* SEE MINIMUM COVER ORIENTATION FOR MINIMUM COVER FOR RIGID AND FLEXIBLE PIPE.

** MAXIMUM INTERIOR PIPE DIMENSION ALLOWED FOR THERMOPLASTIC (HDPE) PIPES IS 60 INCHES.

*** CLASS IV OR V REINFORCED CONCRETE PIPE MAY BE USED IN ACCORDANCE WITH AASHTO DESIGN STANDARDS WHERE THE COVER IS SHALLOWER THAN THE MINIMUM COVER FOR CLASS III. CLASS III IS THE MINIMUM ALLOWED BY DELDOT.

WHERE: S = LARGEST INTERIOR PIPE DIMENSION (IN.)

MINIMUM COVER

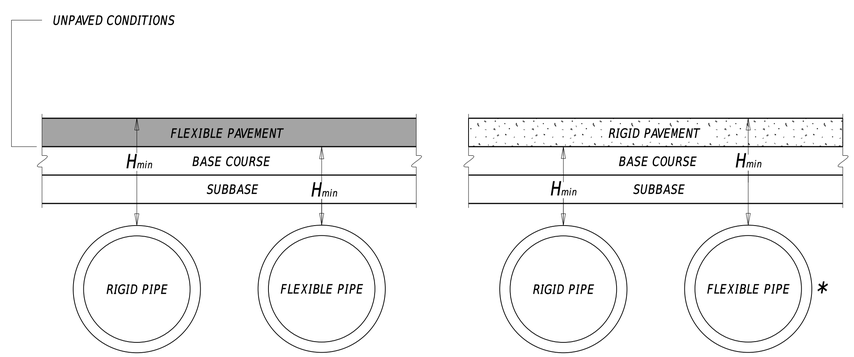

H_{min} = MINIMUM ALLOWABLE COVER DIMENSION

NOTE: THE MINIMUM COVER DIMENSION IS NOT TO BE CONFUSED WITH THE FILL HEIGHT USED FOR CALCULATION PURPOSES, WHICH SHALL BE FROM THE TOP OF THE PIPE TO THE TOP OF THE SURFACE, REGARDLESS OF THE PIPE TYPE OR PAVEMENT TYPE.

*MINIMUM 3" BELOW RIGID PAVEMENT

MINIMUM COVER ORIENTATION

DESIGNER NOTES

1. REINFORCED CONCRETE PIPES, THERMOPLASTIC (HDPE) PIPES, AND STEEL-REINFORCED THERMOPLASTIC (SRPE) PIPES SHALL BE MANUFACTURED AND INSTALLED IN ACCORDANCE WITH SECTION 601 OF THE STANDARD SPECIFICATIONS.

2. FOR MORE INFORMATION ON AVAILABLE PIPE SIZES, PLEASE REFER TO THE FOLLOWING:
   (a) AASHTO M170, AASHTO M207 OR ACPA CONCRETE DESIGN MANUAL FOR REINFORCED CONCRETE PIPES (CIRCULAR AND ELLIPTICAL).
   (b) AASHTO M294 FOR THERMOPLASTIC (HDPE) PIPES. HDPE PIPES SHALL BE LIMITED TO A MAXIMUM DIAMETER OF 60-INCHES.
   (c) AASHTO M294 TYPE D FOR STEEL-REINFORCED THERMOPLASTIC (SRPE) PIPES.

3. IF HDPE PIPES ARE USED ON A PROJECT, THE DESIGNER SHALL SPECIFY THE TYPE OF PIPE ON THE PLANS. SECTION 601 OF THE STANDARD SPECIFICATIONS LISTS SEVERAL TYPES OF HDPE PIPES THAT ARE PERMITTED IN DELAWARE.

4. IT IS RECOMMENDED THAT THE DESIGNER VERIFY THE AVAILABILITY FOR THE SELECTED PIPE TYPE AND SIZE BY CONTACTING THE LOCAL FABRICATORS.

5. THE HYDRAULIC CAPACITY OF PIPE CULVERTS SHALL BE DETERMINED IN ACCORDANCE WITH SECTION 104 - HYDROLOGY AND HYDRAULIC INVESTIGATIONS.

6. THE SIZE AND DIMENSION OF RIPRAP PROTECTION SHALL BE AS REQUIRED BY HYDRAULIC CALCULATIONS. FOR UPSTREAM OR DOWNSTREAM LIMITS, THE MINIMUM LENGTH MAY BE EXTENDED TO FIT FIELD CONDITIONS (BENDS, SCOUR HOLES, ETC.). THE MINIMUM SIZE OF RIPRAP IS R-4 IF BURIED AND R-5 IF EXPOSED. RIPRAP SHALL BE CONTOURED TO MATCH THE SHAPE OF THE EXISTING STREAM BANKS AT THE PROJECT LIMITS.

7. WHEN REQUIRED FOR ENVIRONMENTAL COMPLIANCE, A LOW FLOW CHANNEL SHALL BE CONSTRUCTED IN THE RIPRAP AND CHANNEL BED FILL. DIMENSIONS OF THE LOW FLOW CHANNEL ARE LOCATION SPECIFIC AND WILL BE PROVIDED BY THE ENVIRONMENTAL STUDIES SECTION.

8. THE PIPES AS SHOWN ON SHEET 1 ARE THREE CIRCULAR REINFORCED CONCRETE PIPES. THE USE OF ELLIPTICAL REINFORCED CONCRETE PIPES, HDPE PIPES, AND SRPE PIPES MAY BE CONSIDERED. THE MINIMUM NUMBER OF RUNS IS 1 AND THE MAXIMUM NUMBER OF RUNS IS 3.

9. THE INVERT OF THE CENTER PIPE SHALL BE RECESSED 6-INCHES BELOW THE STREAMBED ELEVATION (I.E. CHANNEL BED FILL ELEVATION). THE SIDE PIPES SHALL BE RAISED ABOVE THE INVERT OF THE CENTER PIPE BY A MINIMUM OF 12-INCHES. IF UNABLE TO COMPLY, COORDINATE WITH THE ENVIRONMENTAL STUDIES SECTION FOR EXCEPTION. REFER TO PIPE INVERT DIAGRAM FOR MORE INFORMATION.

10. LIMITS FOR POTENTIAL EXCAVATION OF UNSUITABLE MATERIAL IN SECTION B-B VIEW NOT SHOWN FOR CLARITY. FOR PROJECTS THAT REQUIRE EXCAVATION OF UNSUITABLE MATERIAL, SHOW THE BOTTOM OF THE STRUCTURAL FOUNDATION AND SPECIFY TYPE(S) OF BACKFILL TO BE USED ON SECTION B-B VIEW. FOR MORE INFORMATION ON SUBFOUNDATIONS, SEE DETAILS 301.01 AND 301.04.

11. THE TOTAL LENGTH OF PIPES SHOULD BE DESIGNED WITH THE FOLLOWING TYPICAL SECTION LENGTHS FOR THE MATERIALS LISTED BELOW:
    (a) REINFORCED CONCRETE PIPES: 8'-0" SECTIONS.
    (b) THERMOPLASTIC (HDPE) PIPES: 20'-0" SECTIONS. NOTE THAT LENGTHS LESS THAN 20'-0" CANNOT BE PLACED AS EXTERIOR SECTIONS DUE TO DURABILITY ISSUES.
    (c) STEEL-REINFORCED THERMOPLASTIC (SRPE) PIPES: 20'-0" OR 24'-0" SECTIONS. NOTE THAT LENGTHS LESS THAN 20'-0" CANNOT BE PLACED AS EXTERIOR SECTIONS DUE TO DURABILITY ISSUES.

OHW = ORDINARY HIGH WATER
HT = HIGH TIDE

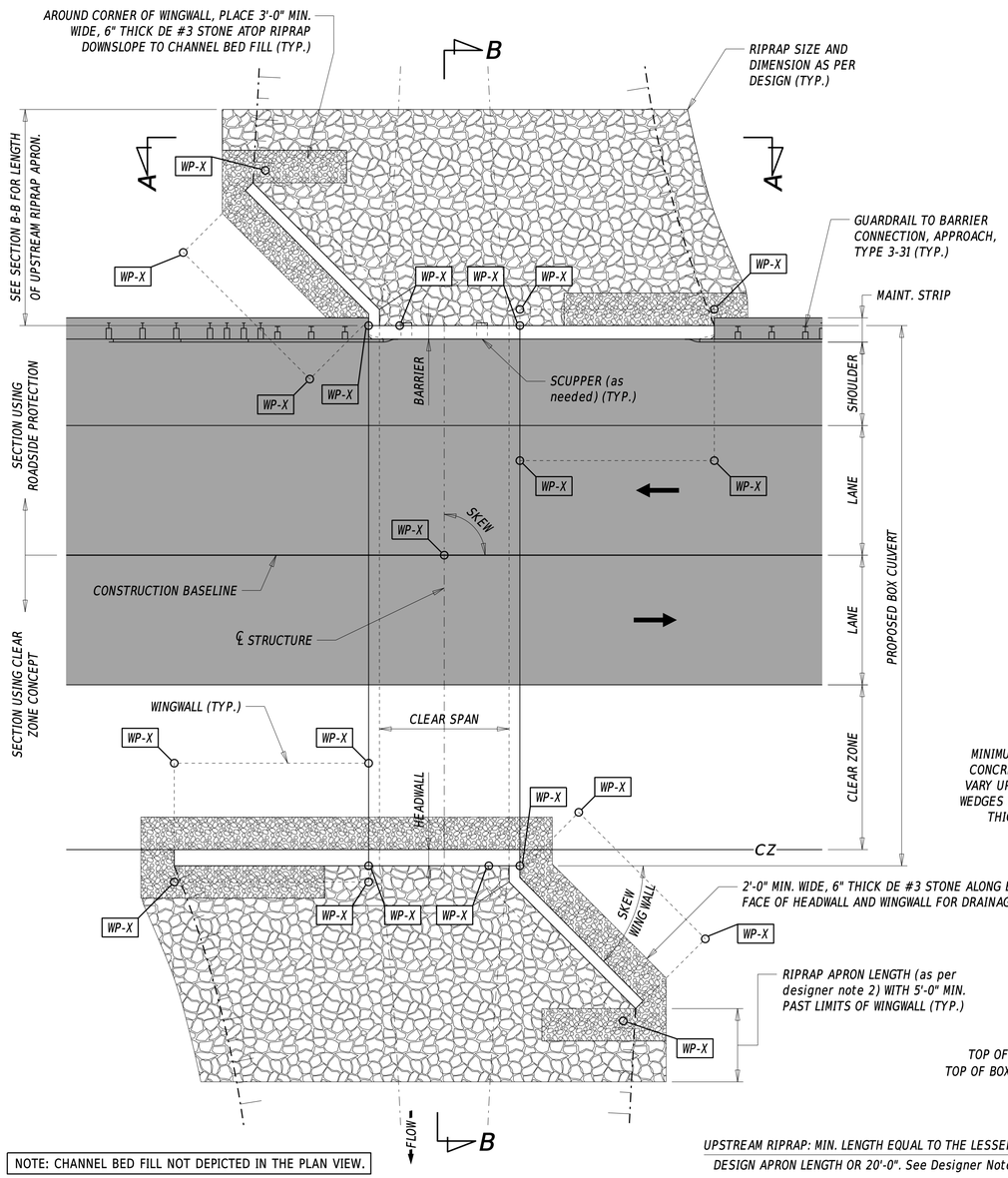

NOTE: CHANNEL BED FILL NOT DEPICTED IN THE PLAN VIEW.

PLAN

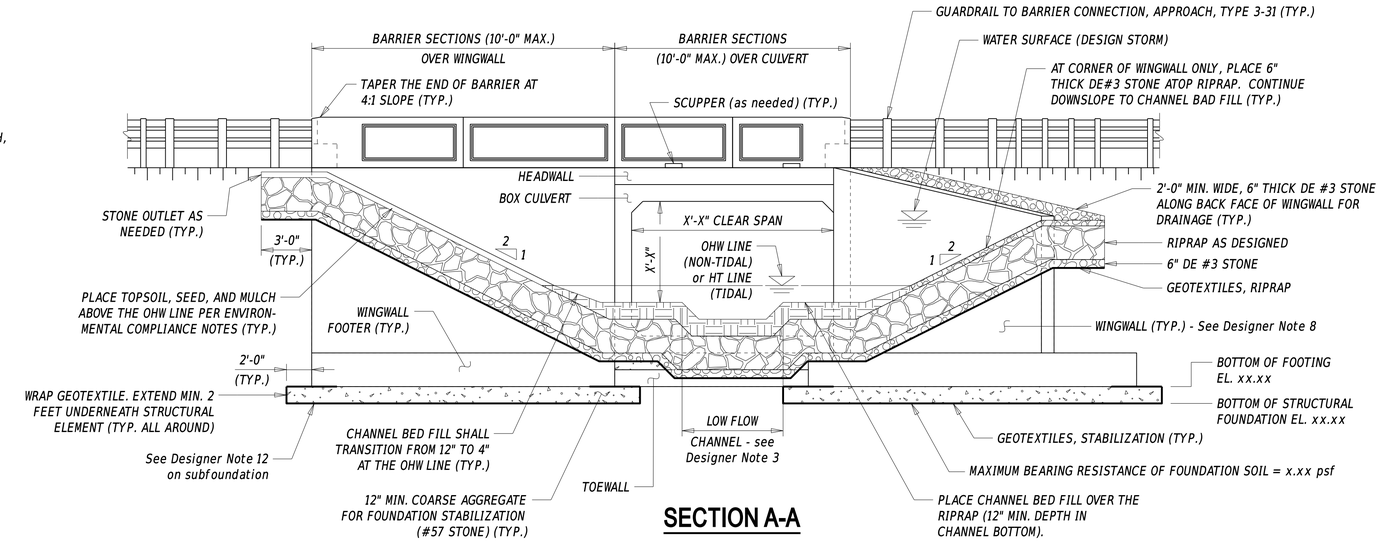

SECTION A-A

NOTE: REFER TO PROJECT SPECIFIC ENVIRONMENTAL COMPLIANCE SHEET(S) FOR FURTHER INFORMATION ON RIPRAP AND TOPSOIL TREATMENT. EXAMPLE IN SECTIONS A-A AND B-B SHOWN USING LOW FLOW CHANNEL.

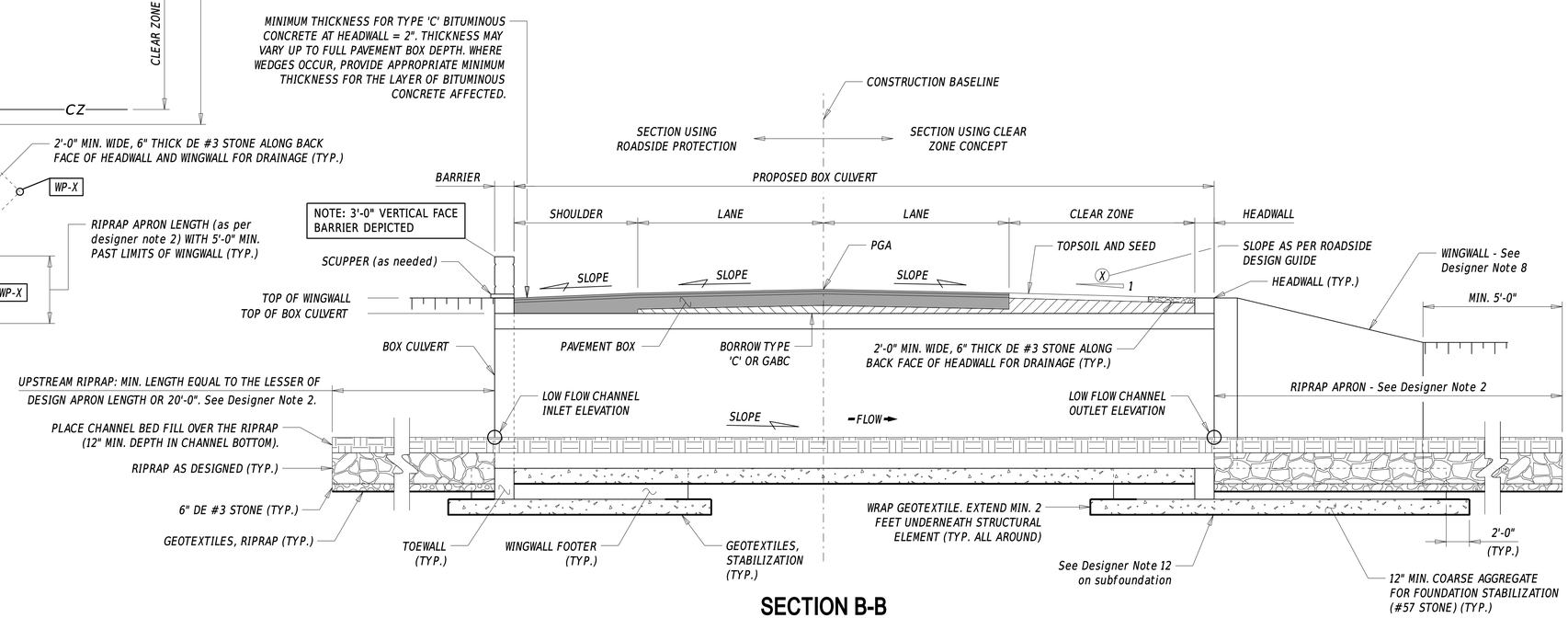

SECTION B-B

NOTE:
-SPECIFY THE NEED FOR A WATERPROOFING MEMBRANE IF BITUMINOUS CONCRETE IS PLACED DIRECTLY ATOP THE BOX CULVERT. IF GABC OR FILL IS PLACED DIRECTLY ATOP THE BOX CULVERT, APPLICATION OF A WATERPROOFING MEMBRANE IS NOT REQUIRED.
-FOR STREAMS ON SHALLOW GRADE, PLACE RIPRAP FLAT AND BUILD APPROPRIATE CHANNEL SLOPE INTO THE CHANNEL BED FILL.

WORKING POINTS

POINT	STATION	OFFSET	NORTHING	EASTING
WP-X	-------	-------	-------	-------
WP-X	-------	-------	-------	-------
WP-X	-------	-------	-------	-------
WP-X	-------	-------	-------	-------

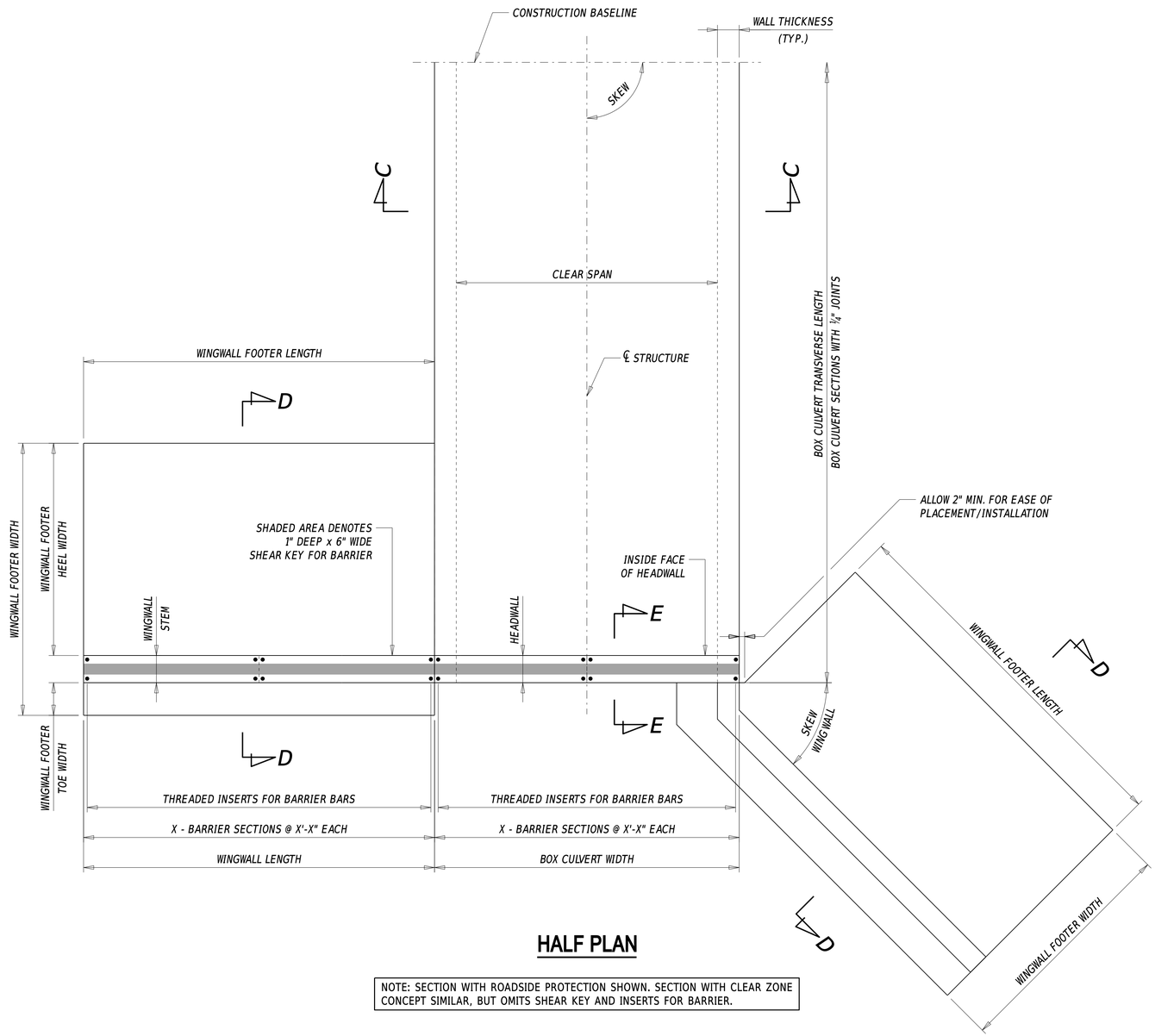

HALF PLAN

NOTE: SECTION WITH ROADSIDE PROTECTION SHOWN. SECTION WITH CLEAR ZONE CONCEPT SIMILAR, BUT OMITS SHEAR KEY AND INSERTS FOR BARRIER.

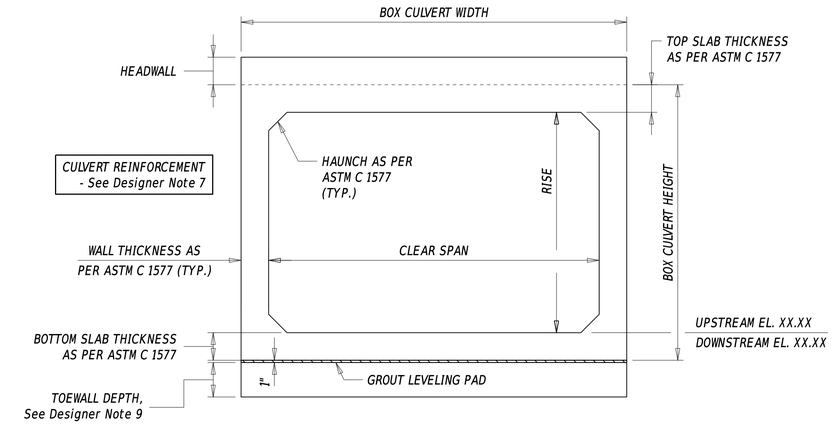

BOX CULVERT

(SECTION C-C)

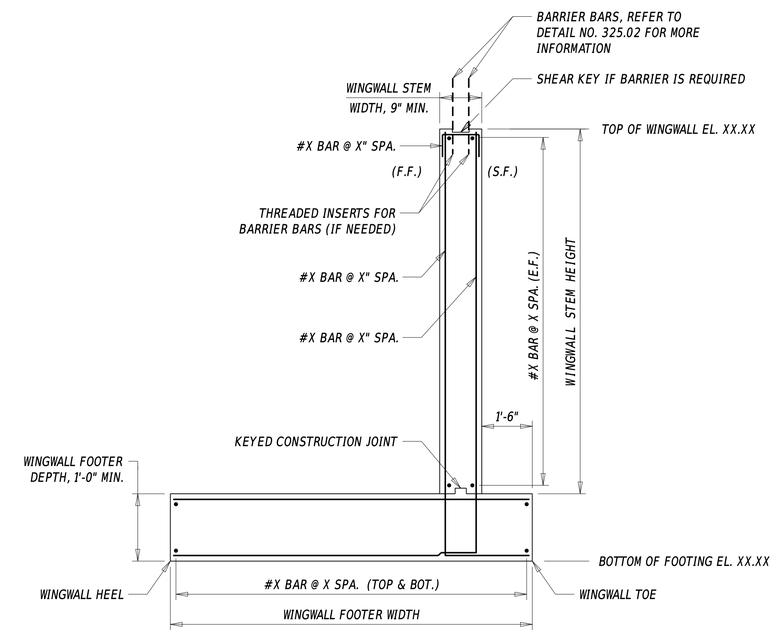

WINGWALL DETAIL

(SECTION D-D)

NOTE: FOR WINGWALL USING CLEAR ZONE CONCEPT OR FLARED WINGWALLS, OMIT SHEAR KEY FOR BARRIER.

LEGEND

E.F. - DENOTES EACH FACE
F.F. - DENOTES FILL FACE
S.F. - DENOTES STREAM FACE

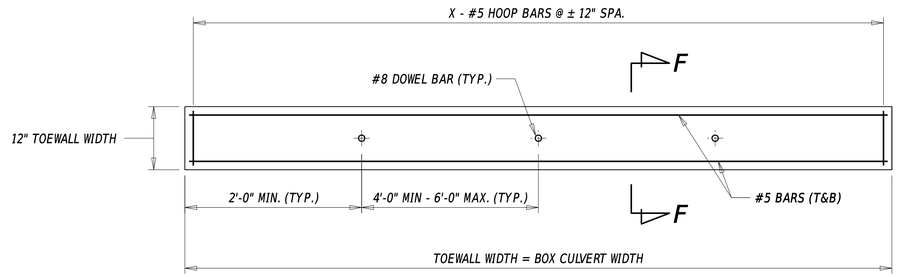

TOEWALL PLAN

(SECTION E-E)

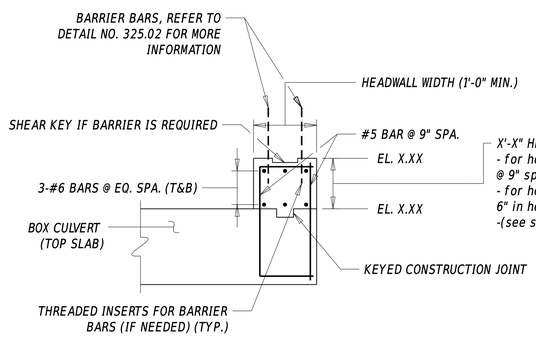

X'-X" HEADWALL
- for headwall without barriers, 6" min. and 2'-0" max. headwall height for use of #5 bar @ 9" spa., if greater than 2'-0" in height, the u-shaped reinforcement must be designed.
- for headwall with barriers, the u-shaped reinforcement must be designed. if less than 6" in height, cast the headwall with the barrier via threaded inserts.
-(see section 107.7.5.1 for more information)

HEADWALL DETAIL

(SECTION E-E)

NOTE: FOR WINGWALL USING CLEAR ZONE CONCEPT OR FLARED WINGWALLS, OMIT SHEAR KEY FOR BARRIER.

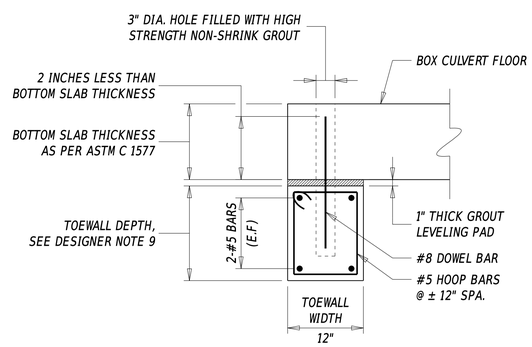

TOEWALL DETAIL

(SECTION F-F)

DESIGNER NOTES

1. THE HYDRAULIC CAPACITY OF BOX CULVERTS SHALL BE DETERMINED IN ACCORDANCE WITH SECTION 104 - HYDROLOGY AND HYDRAULIC INVESTIGATIONS.

2. THE SIZE AND DIMENSION OF RIPRAP PROTECTION SHALL BE AS REQUIRED BY HYDRAULIC CALCULATIONS. FOR UPSTREAM OR DOWNSTREAM LIMITS, THE MINIMUM LENGTH MAY BE EXTENDED TO FIT FIELD CONDITIONS (BENDS, SCOUR HOLES, ETC.). THE MINIMUM SIZE OF RIPRAP IS R-4 IF BURIED AND R-5 IF EXPOSED. RIPRAP SHALL BE CONTOURED TO MATCH THE SHAPE OF THE EXISTING STREAM BANKS AT THE PROJECT LIMITS.

3. AS DIRECTED BY ENVIRONMENTAL STUDIES SECTION, A LOW FLOW CHANNEL SHALL BE CONSTRUCTED IN THE RIPRAP AND CHANNEL BED FILL. DIMENSIONS OF THE LOW FLOW CHANNEL ARE LOCATION SPECIFIC AND WILL BE PROVIDED BY THE ENVIRONMENTAL STUDIES SECTION. THIS APPLIES ONLY TO BOX CULVERTS WITH SPANS OF 10'-0" OR GREATER DUE TO THE INABILITY OF THE LOW FLOW CHANNEL CONSTRUCTED SOLELY FROM CHANNEL BED FILL TO HOLD ITS SHAPE INSIDE THE CULVERT BARREL WHEN THE SPAN IS LESS THAN 10'-0".

4. EXAMPLES SHOWN ON SHEET 1 UTILIZE SCUPPERS. THE NEED FOR SCUPPERS SHALL BE EVALUATED ON A CASE BY CASE BASIS.

5. 'GUARDRAIL OVER CULVERTS' AS SHOWN IN DELDOT STANDARD CONSTRUCTION DETAILS MAY BE CONSIDERED FOR BOX CULVERTS IN LIEU OF CONCRETE BARRIERS IF THE WINGWALLS ARE FLARED (OR OFFSET) AND THE WIDTH OF THE BOX CULVERT WILL ACCOMMODATE FOR THE MAIN SPACING OF 'GUARDRAIL OVER CULVERTS'.

6. MORE INFORMATION ON BARRIER DETAILS CAN BE FOUND IN DETAIL NO. 325.02 - BRIDGE RAILING DETAILS.

7. NO REINFORCEMENT IS SHOWN IN 'BOX CULVERT (SECTION C-C)' DUE TO ASSUMPTION THAT ASTM C1577 BOX CULVERT SIZES WILL TYPICALLY BE USED. BOX CULVERT SIZES AS SHOWN IN ASTM C1577 SHOULD BE USED WHEN POSSIBLE, BUT IN CASES WHERE BOX CULVERT SIZES OR REINFORCEMENT LISTED IN ASTM C1577 CANNOT BE USED (MOSTLY DUE TO THE NEED TO USE SIZES GREATER THAN 12 FT X 12 FT OR IF THE SKEW IS GREATER THAN 30°), THE DESIGNER MUST DESIGN AND SHOW REINFORCEMENT DETAILS OF THE BOX CULVERT ON THE PLANS, SIMILAR TO SECTION C-C IN DETAIL NO. 360.01 - PRECAST CONCRETE RIGID FRAME DETAILS.

8. WINGWALL LAYOUT:
   THE DESIGNER SHALL CONSIDER THE HEIGHT OF THE ROADWAY EMBANKMENT, THE ELEVATION OF THE SURROUNDING GROUND, AND THE DEPTH OF THE STREAM CHANNEL TO DETERMINE THE WINGWALL LAYOUT.

   (a.) AT SITES WHERE THERE IS LITTLE OR NO ROADWAY EMBANKMENT AND A DEEP CHANNEL, WINGWALLS PARALLEL TO THE ROADWAY ARE THE PREFERRED OPTION. PARALLEL WINGWALLS FOR SECTION WITH ROADSIDE PROTECTION CAN UTILIZE BARRIER ALONG THE ENTIRE LENGTH (AS DEPICTED IN THIS DETAIL) OR BE OFFSET BEHIND GUARDRAIL (NOT DEPICTED IN THIS DETAIL) WHERE THE BARRIER IS PLACED ONLY ON THE BOX CULVERT OR GUARDRAIL OVER CULVERTS IS USED.

   (b.) AT SITES WHERE THERE IS A RELATIVELY TALL ROADWAY EMBANKMENT AND VERY SHALLOW CHANNEL, WINGWALLS PERPENDICULAR TO THE ROADWAY MAY BE USED.

   (c.) FOR CASES IN-BETWEEN (THAT HAVE SOME ROADWAY EMBANKMENT AND SOME CHANNEL DEPTH), ANGLED WINGWALLS ARE PREFERRED. 45° WINGWALLS ARE DEPICTED IN THIS DETAIL, BUT 15°, 30°, AND 60° WINGWALLS MAY BE USED BASED ON SITE CONDITIONS. IN ADDITION, WHERE THE STREAM APPROACHES THE BRIDGE INLET AT AN ACUTE ANGLE OF ATTACK, CONSIDER USING A DIFFERENT WINGWALL ANGLE ON THE OUTSIDE OF THE BEND SO THAT THE WINGWALL CAN ACT AS A GUIDE WALL TO HELP DIRECT FLOW IN TO THE INLET.

   (d.) AT BOX CULVERTS WITH A HIGH SKEW ANGLE (GREATER THAN 20°), WINGWALLS WITH BARRIER PARALLEL TO THE ROADWAY CAN BE ADVANTAGEOUS FOR GUARDRAIL TO BARRIER CONNECTION, REGARDLESS OF SITE CONDITIONS.

9. TOEWALLS MUST BE EMBEDDED A MINIMUM OF 3'-6" BELOW THE STREAMBED IN ACCORDANCE WITH SECTION 107.7.5.3. IN AN EVENT WHERE THE WINGWALL FOOTINGS ARE DEEPER THAN THE MINIMUM EMBEDMENT REQUIREMENTS, THE BOTTOM OF THE TOEWALL SHOULD MEET THE BOTTOM OF THE WINGWALL FOOTINGS.

10. THE FORMER PRECAST NOTES (WEEPHOLES, CONNECTION PLATES, ETC.) INCLUDED IN PAST PRECAST CONCRETE BOX CULVERT PROJECTS ARE NO LONGER REQUIRED TO BE SHOWN ON THE PLANS. THESE NOTES HAVE BEEN ADDED TO SECTION 612 OF THE DELDOT STANDARD SPECIFICATIONS.

11. PLACEMENT OF WEEPHOLES: WHEN POSSIBLE, PLACE WEEPHOLE OUTLETS ABOVE THE OHW LINE. THE DESIGNER SHOULD CONSIDER USING WEEPHOLES WHERE SPRINGS ARE PREVALENT (PIEDMONT REGION) OR WHEN THE BRIDGE IS IN PRONOUNCED SAG/VALLEY. WEEPHOLES ARE GENERALLY NOT NEEDED WHEN THE STRUCTURE IS IN AN EMBANKMENT.

12. LIMITS FOR POTENTIAL EXCAVATION OF UNSUITABLE MATERIAL IN SECTION A-A AND B-B VIEWS NOT SHOWN FOR CLARITY. FOR PROJECTS THAT REQUIRE EXCAVATION OF UNSUITABLE MATERIAL, SHOW THE BOTTOM OF STRUCTURAL FOUNDATION AND SPECIFY TYPE(S) OF BACKFILL TO BE USED ON SECTION A-A AND B-B VIEWS. FOR MORE INFORMATION ON SUBFOUNDATIONS, SEE DETAILS 301.01 AND 301.04.

13. FOR ASTM C 1577 BOX CULVERTS, PROVIDE ADDITIONAL INFORMATION FOR THE DELDOT LOAD RATER UNDERNEATH THE 'LOAD RATING SUMMARY' ON THE PROJECT NOTES SHEET. THE ADDITIONAL INFORMATION SHOULD INCLUDE DESIGN EARTH COVER, REINFORCEMENT AREAS, CULVERT OPENING, DESIGN EFFECTIVE WIDTH, ETC. ENSURE THAT THE APPROVED WORKING DRAWINGS FOR ASTM C 1577 BOX CULVERTS ARE FORWARDED TO THE DELDOT LOAD RATER SINCE THE FINAL LOAD RATING WILL BE BASED ON THE CONSTRUCTED BOX CULVERT.

OHW = ORDINARY HIGH WATER
HT = HIGH TIDE

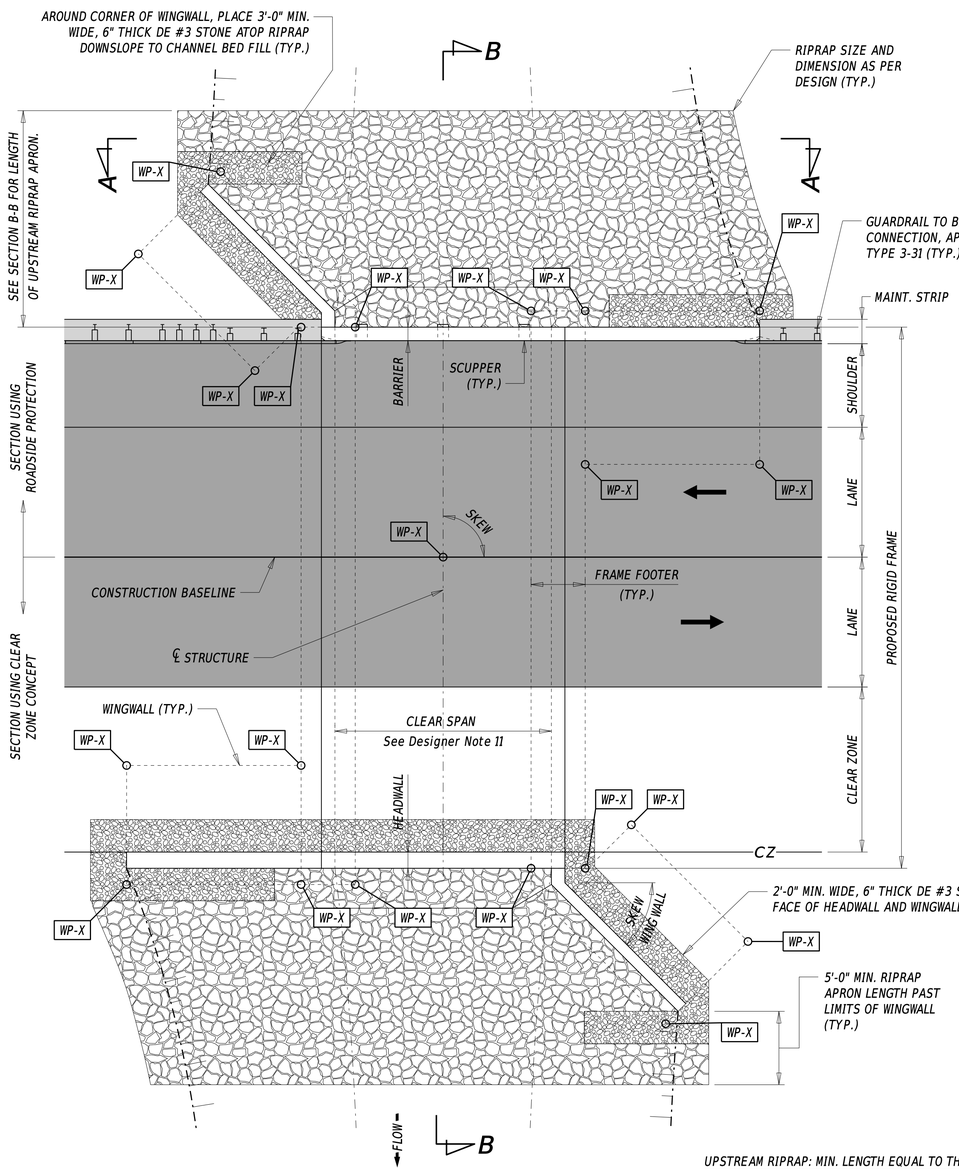

PLAN

NOTE: CHANNEL BED FILL AND RIPRAP UNDER RIGID FRAME NOT SHOWN FOR CLARITY.

WORKING POINTS				
POINT	STATION	OFFSET	NORTHING	EASTING
WP-X	-------	-------	-------	-------
WP-X	-------	-------	-------	-------
WP-X	-------	-------	-------	-------
WP-X	-------	-------	-------	-------

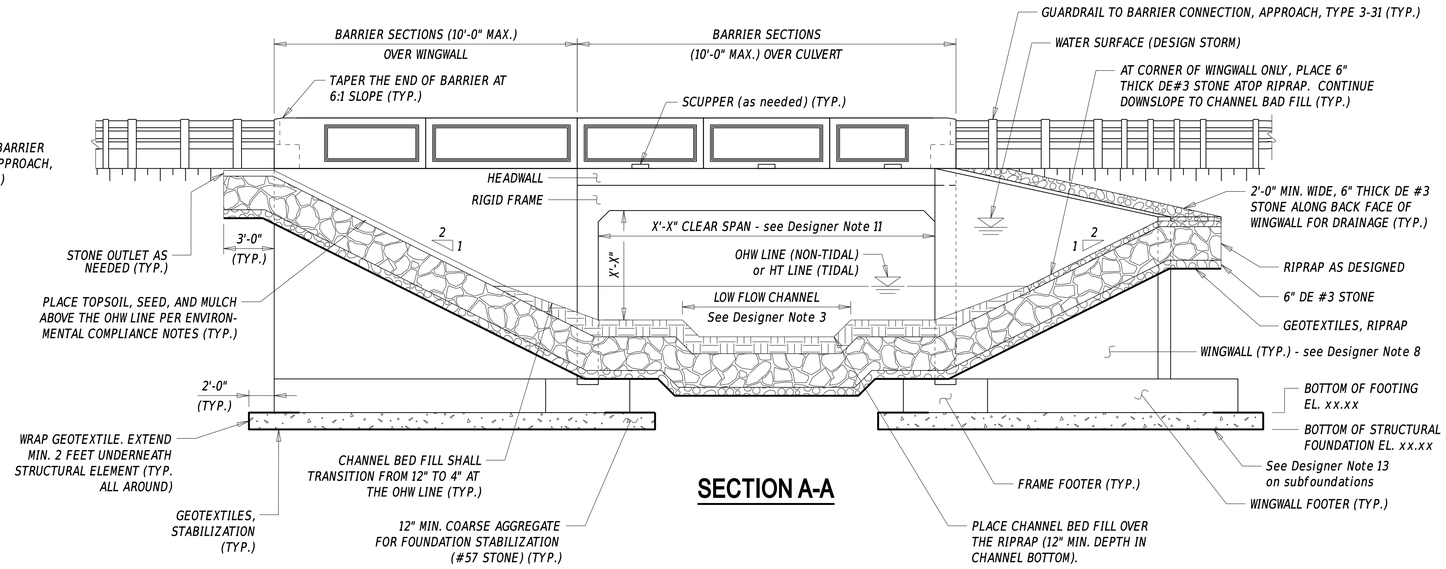

SECTION A-A

NOTE: REFER TO PROJECT SPECIFIC ENVIRONMENTAL COMPLIANCE SHEET(S) FOR FURTHER INFORMATION ON RIPRAP AND TOPSOIL TREATMENT. EXAMPLE IN SECTIONS A-A AND B-B SHOWN USING LOW FLOW CHANNEL.

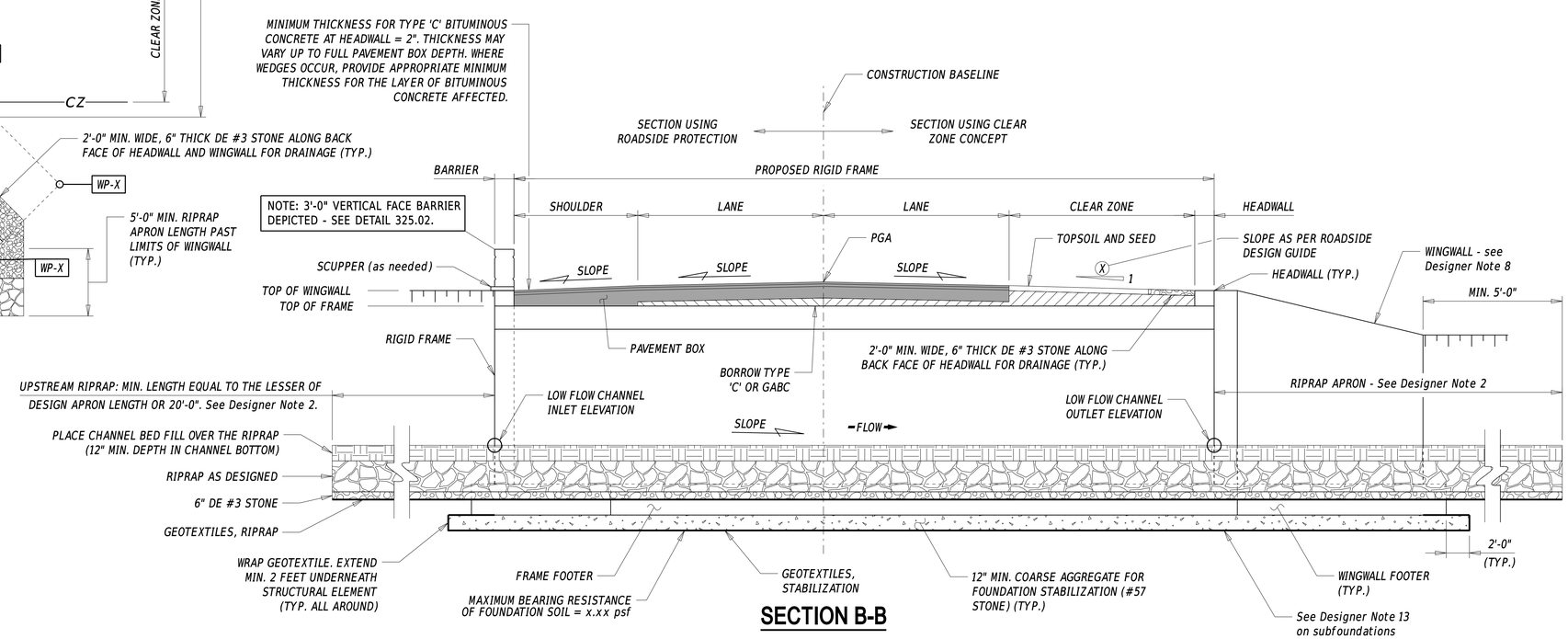

SECTION B-B

NOTE:
-SPECIFY THE NEED FOR A WATERPROOFING MEMBRANE IF BITUMINOUS CONCRETE IS PLACED DIRECTLY ATOP THE RIGID FRAME. IF GABC OR FILL IS PLACED DIRECTLY ATOP THE RIGID FRAME, APPLICATION OF A WATERPROOFING MEMBRANE IS NOT REQUIRED.
-FOR STREAMS ON SHALLOW GRADE, PLACE RIPRAP FLAT AND BUILD APPROPRIATE CHANNEL SLOPE INTO THE CHANNEL BED FILL.

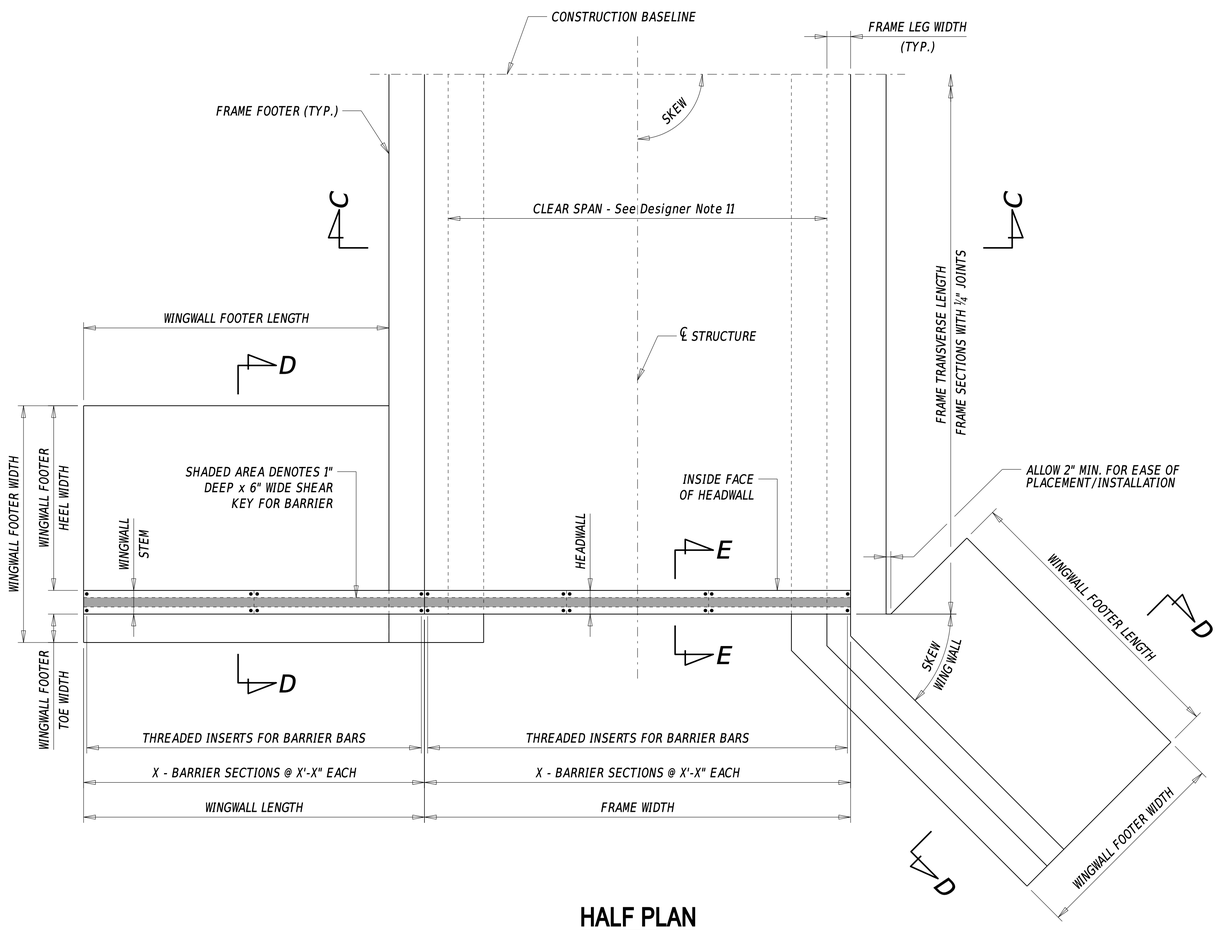

HALF PLAN

NOTE: SECTION WITH ROADSIDE PROTECTION SHOWN. SECTION WITH CLEAR ZONE CONCEPT SIMILAR, BUT OMITS SHEAR KEY AND INSERTS FOR BARRIER.

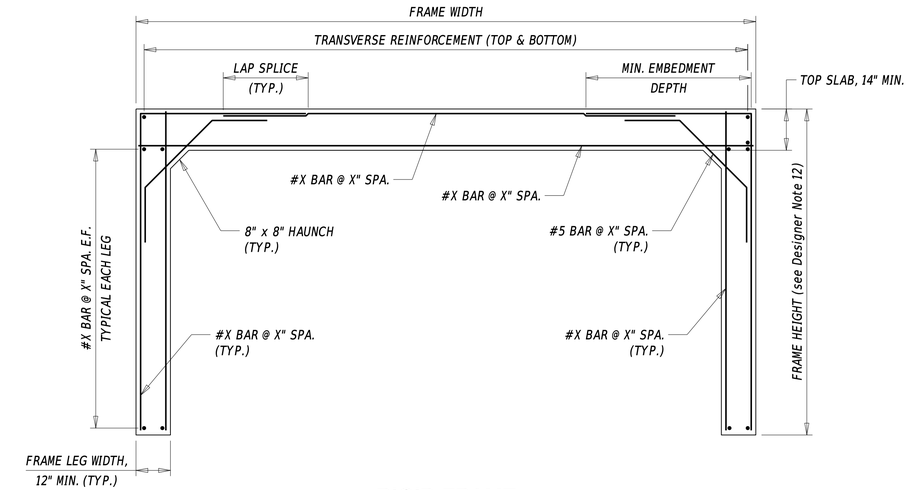

RIGID FRAME

(SECTION C-C)

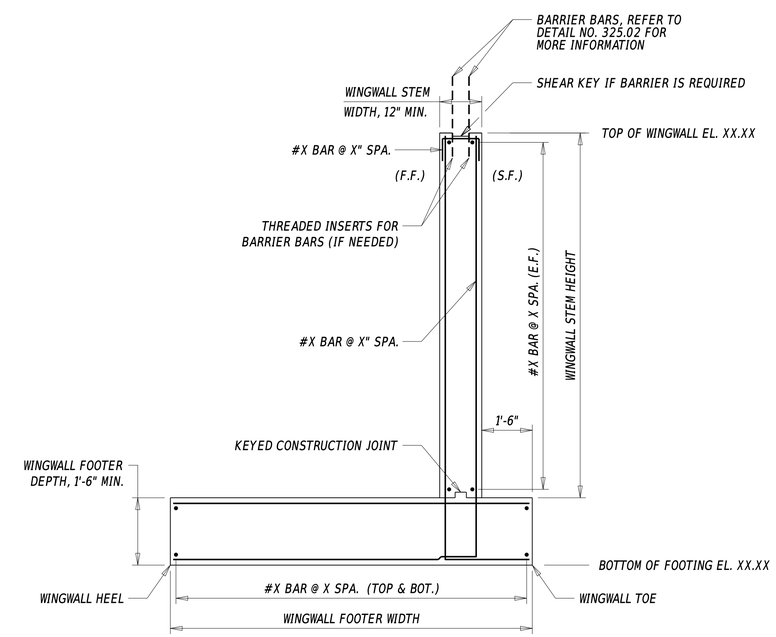

WINGWALL DETAIL

(SECTION D-D)

NOTE: FOR WINGWALL USING CLEAR ZONE CONCEPT OR FLARED WINGWALLS, OMIT SHEAR KEY FOR BARRIER.

LEGEND
E.F. - DENOTES EACH FACE
F.F. - DENOTES FILL FACE
S.F. - DENOTES STREAM FACE

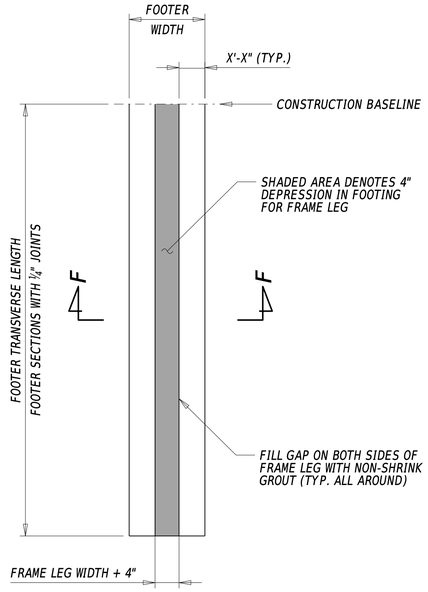

FRAME FOOTER HALF PLAN

(FOR WINGWALLS ATTACHING TO END FACE OF FRAME)

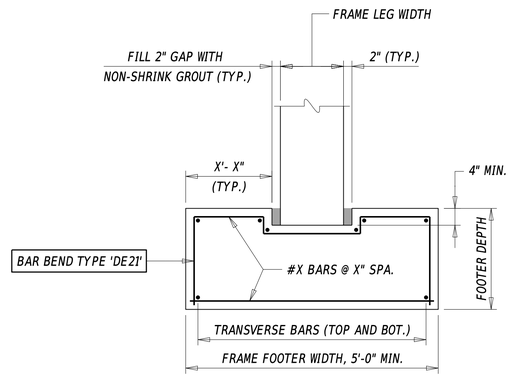

FRAME FOOTER SECTION

(SECTION F-F)

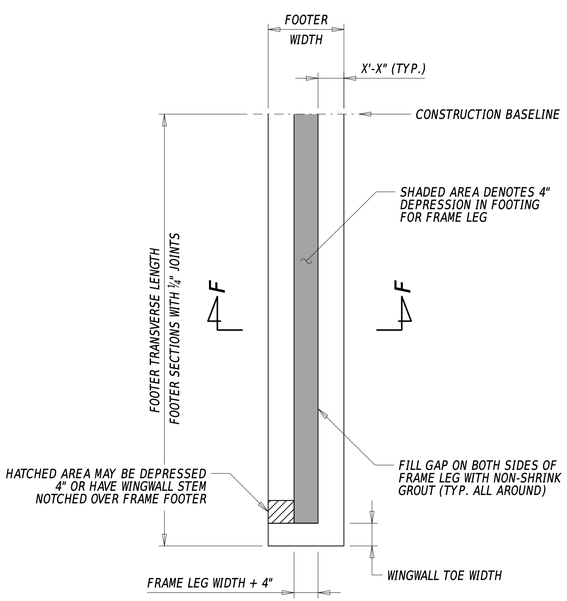

FRAME FOOTER HALF PLAN

(FOR WINGWALLS PARALLEL TO ROADWAY)

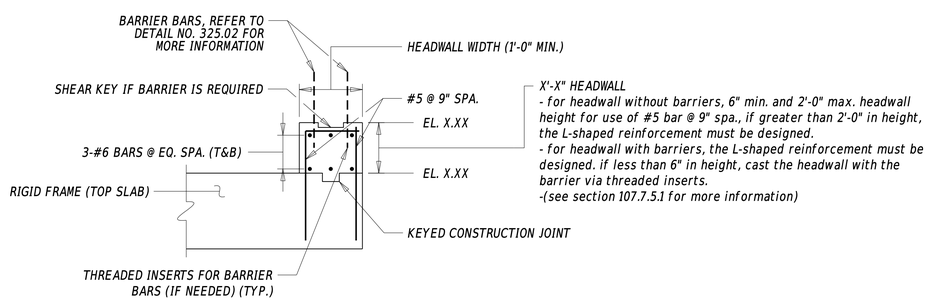

HEADWALL DETAIL

(SECTION E-E)

NOTE: FOR WINGWALL USING CLEAR ZONE CONCEPT OR FLARED WINGWALLS, OMIT SHEAR KEY FOR BARRIER.

DESIGNER NOTES

1. THE HYDRAULIC CAPACITY OF RIGID FRAMES SHALL BE DETERMINED IN ACCORDANCE WITH SECTION 104 - HYDROLOGY AND HYDRAULIC INVESTIGATIONS.
2. THE SIZE AND DIMENSION OF RIPRAP PROTECTION SHALL BE AS REQUIRED BY HYDRAULIC CALCULATIONS. FOR UPSTREAM OR DOWNSTREAM LIMITS, THE MINIMUM LENGTH MAY BE EXTENDED TO FIT FIELD CONDITIONS (BENDS, SCOUR HOLES, ETC.). THE MINIMUM SIZE OF RIPRAP IS R-4 IF BURIED AND R-5 IF EXPOSED. RIPRAP SHALL BE CONTOURED TO MATCH THE SHAPE OF THE EXISTING STREAM BANKS AT THE PROJECT LIMITS.
3. AS DIRECTED BY ENVIRONMENTAL STUDIES SECTION, A LOW FLOW CHANNEL SHALL BE CONSTRUCTED IN THE RIPRAP AND CHANNEL BED FILL. DIMENSIONS OF THE LOW FLOW CHANNEL ARE LOCATION SPECIFIC AND WILL BE PROVIDED BY THE ENVIRONMENTAL STUDIES SECTION.
4. EXAMPLES SHOWN ON SHEET 1 UTILIZE SCUPPERS. THE NEED FOR SCUPPERS SHALL BE EVALUATED ON A CASE BY CASE BASIS.
5. 'GUARDRAIL OVER CULVERTS' AS SHOWN IN DELDOT STANDARD CONSTRUCTION DETAILS MAY BE CONSIDERED FOR SHORT SPAN FRAMES (APPROXIMATELY 20' SPAN OR UNDER) IN LIEU OF CONCRETE BARRIERS IF THE WINGWALLS ARE FLARED OR OFFSET AND THE WIDTH OF THE FRAME WILL ACCOMMODATE FOR THE MAIN SPACING OF 'GUARDRAIL OVER CULVERTS'.
6. THE EXAMPLES USED FOR RIGID FRAMES IN THIS DETAIL DOES NOT INCLUDE ANY MENTION OF DEEP FOUNDATIONS. GENERALLY FOR RIGID FRAMES, ONE SHOULD STRIVE TO USE SPREAD FOOTERS. IF DEEP FOUNDATIONS ARE REQUIRED, OTHER ALTERNATIVES MAY HAVE TO BE CONSIDERED SUCH AS SINGLE SPAN BRIDGE SUPPORTED BY STUB ABUTMENTS ON DRIVEN PILES.
7. MORE INFORMATION ON BARRIER DETAILS CAN BE FOUND IN DETAIL NO. 325.02 - BRIDGE RAILING DETAILS.
8. WINGWALL LAYOUT:
   THE DESIGNER SHALL CONSIDER THE HEIGHT OF THE ROADWAY EMBANKMENT, THE ELEVATION OF THE SURROUNDING GROUND, AND THE DEPTH OF THE STREAM CHANNEL TO DETERMINE THE WINGWALL LAYOUT.

   (a.) AT SITES WHERE THERE IS LITTLE OR NO ROADWAY EMBANKMENT AND A DEEP CHANNEL, WINGWALLS PARALLEL TO THE ROADWAY ARE THE PREFERRED OPTION. PARALLEL WINGWALLS FOR SECTION WITH ROADSIDE PROTECTION CAN UTILIZE BARRIER ALONG THE ENTIRE LENGTH (AS DEPICTED IN THIS DETAIL) OR BE OFFSET BEHIND GUARDRAIL (NOT DEPICTED IN THIS DETAIL) WHERE THE BARRIER IS PLACED ONLY ON THE RIGID FRAME OR GUARDRAIL OVER CULVERTS IS USED.

   (b.) AT SITES WHERE THERE IS A RELATIVELY TALL ROADWAY EMBANKMENT AND VERY SHALLOW CHANNEL, WINGWALLS PERPENDICULAR TO THE ROADWAY MAY BE USED.

   (c.) FOR CASES IN-BETWEEN (THAT HAVE SOME ROADWAY EMBANKMENT AND SOME CHANNEL DEPTH), ANGLED WINGWALLS ARE PREFERRED. 45° WINGWALLS ARE DEPICTED IN THIS DETAIL, BUT 15°, 30°, AND 60° WINGWALLS MAY BE USED BASED ON SITE CONDITIONS. IN ADDITION, WHERE THE STREAM APPROACHES THE BRIDGE INLET AT AN ACUTE ANGLE OF ATTACK, CONSIDER USING A DIFFERENT WINGWALL ANGLE ON THE OUTSIDE OF THE BEND SO THAT THE WINGWALL CAN ACT AS A GUIDE WALL TO HELP DIRECT FLOW IN TO THE INLET.

   (d.) AT FRAMES WITH A HIGH SKEW ANGLE (GREATER THAN 20°), WINGWALLS WITH BARRIER PARALLEL TO THE ROADWAY CAN BE ADVANTAGEOUS FOR GUARDRAIL TO BARRIER CONNECTION, REGARDLESS OF SITE CONDITIONS.
9. THE FORMER PRECAST NOTES (WEEPHOLES, CONNECTION PLATES, ETC.) INCLUDED IN PAST REINFORCED CONCRETE RIGID FRAME PROJECTS ARE NO LONGER REQUIRED TO BE SHOWN ON THE PLANS. THESE NOTES HAVE BEEN ADDED TO SECTION 612 OF THE DELDOT STANDARD SPECIFICATIONS.
10. PLACEMENT OF WEEPHOLES: WHEN POSSIBLE, PLACE WEEPHOLE OUTLETS ABOVE THE OHW LINE. THE DESIGNER SHOULD CONSIDER USING WEEPHOLES WHERE SPRINGS ARE PREVALENT (PIEDMONT REGION) OR WHEN THE BRIDGE IS IN PRONOUNCED SAG/VALLEY. WEEPHOLES ARE GENERALLY NOT NEEDED WHEN THE STRUCTURE IS IN AN EMBANKMENT.
11. THE DESIGNER SHOULD CONSIDER USE OF PRECAST CONCRETE RIGID FRAMES FOR SPANS OF 14'-0" TO 25'-0".
12. THE DESIGNER SHOULD BE AWARE OF TRANSPORTATION ISSUES ASSOCIATED WITH RIGID FRAMES WITH HEIGHTS GREATER THAN 13'-6", WHICH WILL REQUIRE POLICE ESCORT (WIDE LOAD). THIS WILL LIKELY RESULT IN HIGHER BID PRICE. OTHER BRIDGE TYPES SHOULD BE EVALUATED IF THIS IS THE CASE.
13. LIMITS FOR POTENTIAL EXCAVATION OF UNSUITABLE MATERIAL IN SECTION A-A AND B-B VIEWS NOT SHOWN FOR CLARITY. FOR PROJECTS THAT REQUIRE EXCAVATION OF UNSUITABLE MATERIAL, SHOW BOTTOM OF STRUCTURAL FOUNDATION AND SPECIFY TYPE(S) OF BACKFILL TO BE USED ON SECTION A-A AND B-B VIEWS, FOR MORE INFORMATION ON SUBFOUNDATIONS, SEE DETAILS 301.01 AND 301.04.